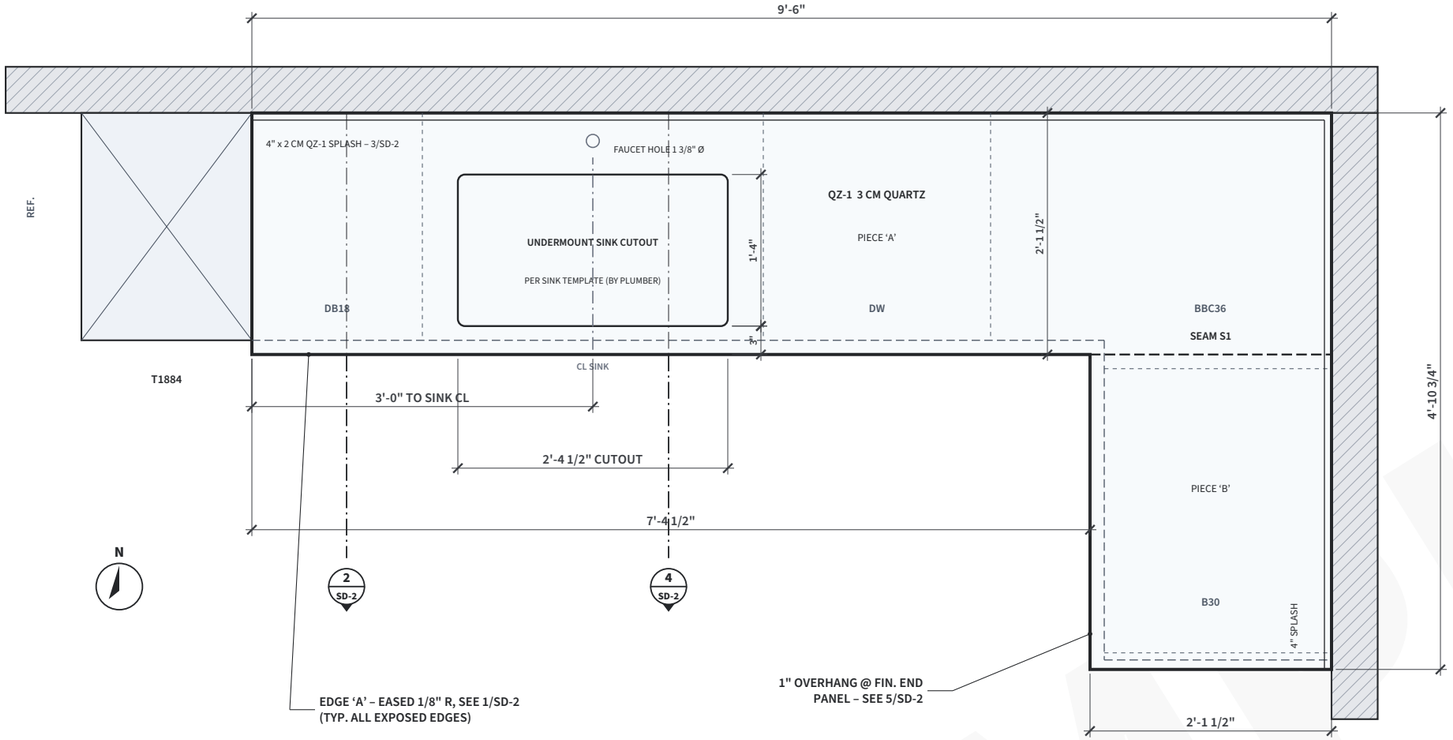

1 SD-1 COUNTERTOP & CASEWORK PLAN – BREAK ROOM 118

SCALE: 3/4" = 1'-0"

GENERAL NOTES

1. All dimensions field verified 10/05/26 after drywall finish. Do not scale drawings.

2. Countertop: QZ-1 3 cm, polished; exposed edges eased 1/8" R. Max overhang w/o support 10".

3. Seams: 1/16" max, color-matched epoxy, min. 6" from cutouts. Seam S1 at inside corner.

4. Undermount sink & faucet by plumbing sub; cutout per manufacturer template (on site 11/06).

5. Casework: AWI Custom grade. PL-1 exterior, white TFM interior, 3 mm PVC edge.

6. Base cabinets 34 1/2" H on separate 4" toe kick; wall cabinets 12" D, bottom at 54" A.F.F.

7. Wall blocking by GC: 2x8 continuous at 32"–36" and 52"–86" A.F.F.

8. Rev 2: per architect review – confirm DW opening 24" clear; sink CL 3'-0" from tall cab.

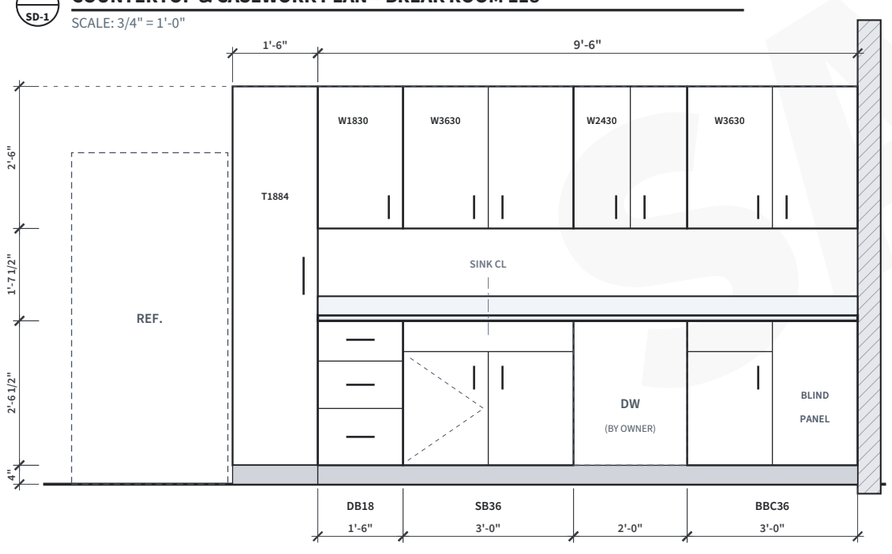

2 SD-1 ELEVATION A – NORTH WALL

SCALE: 3/8" = 1'-0"

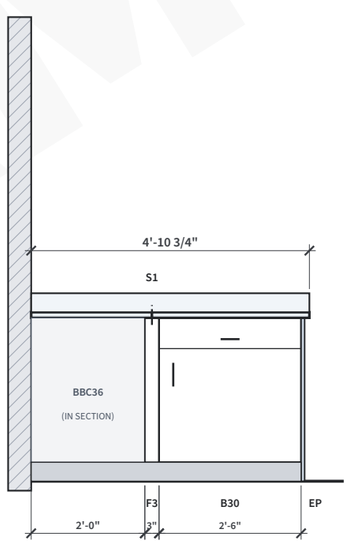

3 SD-1 ELEVATION B – EAST WALL

SCALE: 3/8" = 1'-0"

CABINET SCHEDULE – RM 118

TAG	DESCRIPTION	W x H x D	QTY
DB18	Drawer base, 3 drawers	18 x 34 1/2 x 24	1
SB36	Sink base, false front, 2 dr	36 x 34 1/2 x 24	1
BBC36	Blind corner base (blind 18")	36 x 34 1/2 x 24	1
B30	Base, 1 drawer / 2 doors	30 x 34 1/2 x 24	1
F3	Filler, scribe to corner	3 x 34 1/2	1
EP	Finished end panel, PL-1	3/4 x 34 1/2 x 24	1
W1830	Wall, 1 door	18 x 30 x 12	1
W3630	Wall, 2 doors	36 x 30 x 12	2
W2430	Wall, 2 doors	24 x 30 x 12	1
T1884	Tall pantry, 4 adj. shelves	18 x 84 x 24	1

COUNTERTOP SUMMARY

PIECE	SIZE	SF
A – run A incl. corner	9'-6" x 2'-1 1/2"	20.19
B – run B return	2'-9 1/4" x 2'-1 1/2"	5.89
Splash (2 CM, 4")	14'-4 3/4" total LF	4.80
TOTAL QZ-1 (est. 31 SF)	1 cutout · 1 faucet hole	30.87

SAMPLE – Fictional project for demonstration. All names, companies, quantities and figures are fictional. Prepared by Axentra Solutions as a portfolio work sample – not for construction.

AXENTRA SOLUTIONS
Drafting & Shop Drawing Services
[Phone] · [Email] · axentra-solutions.com

PROJECT
Riverside Medical Office Build-Out
1450 Riverbend Parkway, Suite 200
Anytown, ST 00000
Job no. 26-118

FABRICATOR / INSTALLER (CLIENT)
Summit Surfaces & Interiors, LLC
Casework & countertop subcontractor

GENERAL CONTRACTOR · ARCHITECT
Northgate Builders, Inc.
Lumen Architecture Studio

MATERIALS
QZ-1 3 cm quartz – "Glacier Mist", polished
PL-1 HPL – "Gray Linen" (PL-1), matte
Interior: white TFM · 3 mm PVC edgeband
Hardware: 110° concealed hinges, FEXT slides

REVISIONS

REV	DATE	DESCRIPTION	BY
0	09/14/26	Issued for approval	PPO
1	09/28/26	Sink CL moved per RFI-004; DW opening	PPO
2	10/06/26	Incorporate review notes; F.V. dims	PPO

ARCHITECT / GC REVIEW STAMP

☐ Approved ☑ Approved as noted
☐ Revise & resubmit ☐ Rejected

P. Nair, Lumen Architecture Studio – 10/02/26
Note: verify sink CL at rough-in (see Rev 1).

SAMPLE – Fictional project for demonstration. All names, companies and dimensions are fictional. Not for construction.

DRAWING TITLE
BREAK ROOM 118
CASEWORK & QUARTZ COUNTERTOP
PLAN, ELEVATIONS & SCHEDULE

DRAWN: Axentra Drafting	CHECKED: D. Whitfield
DATE: 09/14/26	SCALE: AS NOTED
SHOP DWG NO.: SD-26118-118	FIELD VERIFIED: 10/05/26
SHEET	REVISION

SD-1 2

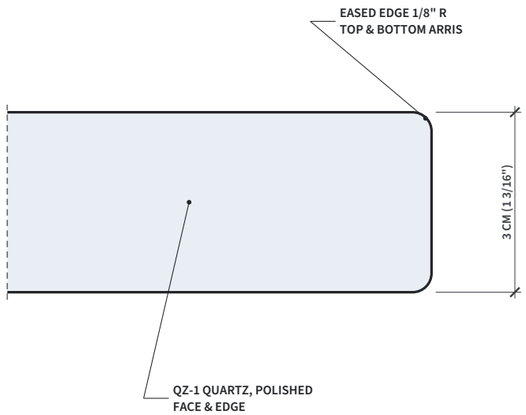

1 SD-2 EDGE PROFILE 'A' – EASED

SCALE: FULL SIZE (1:1)

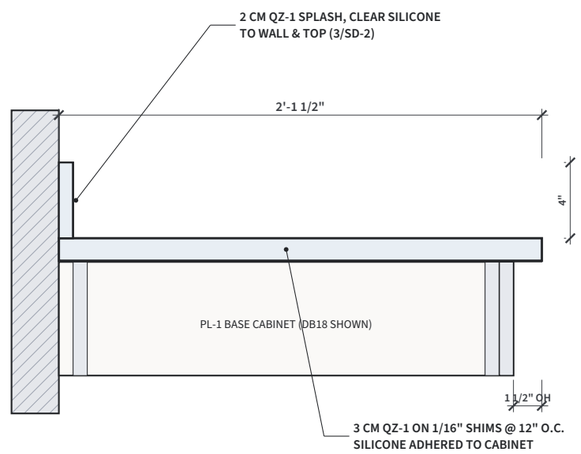

2 SD-2 TYPICAL COUNTERTOP SECTION

SCALE: 1 1/2" = 1'-0"

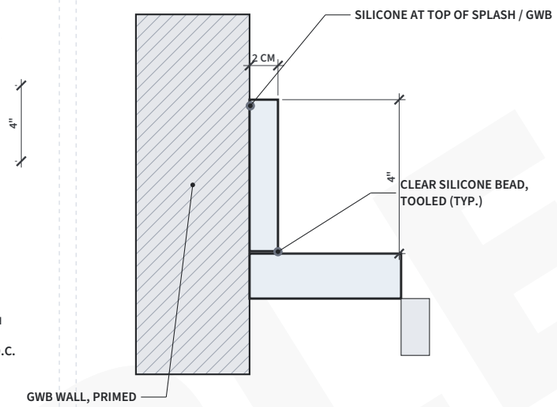

3 SD-2 BACKSPLASH DETAIL

SCALE: 3" = 1'-0"

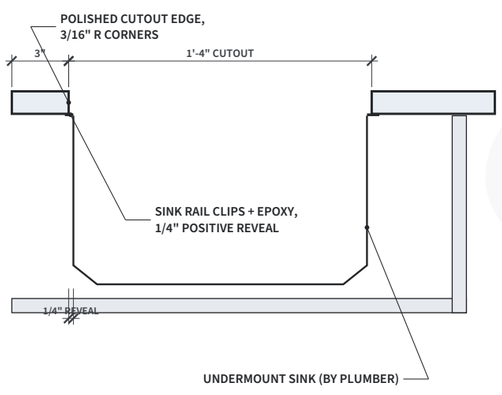

4 SD-2 UNDERMOUNT SINK SECTION

SCALE: 1 1/2" = 1'-0"

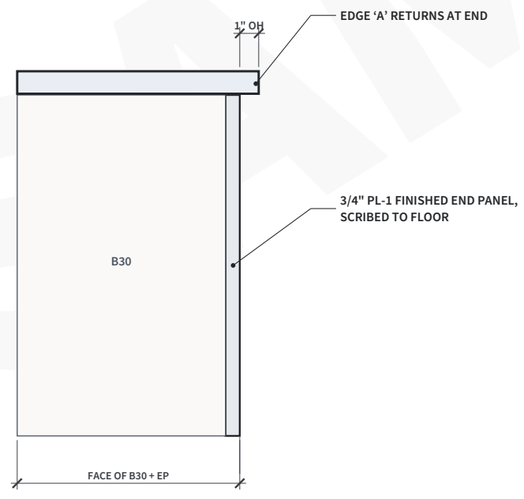

5 SD-2 OVERHANG AT FINISHED END

SCALE: 1 1/2" = 1'-0"

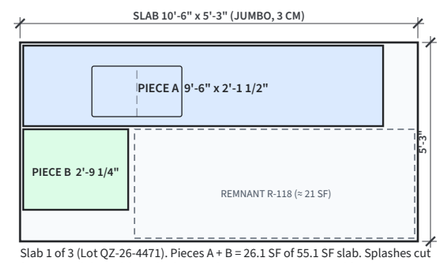

Slab 1 of 3 (Lot QZ-26-4471). Pieces A + B = 26.1 SF of 55.1 SF slab. Splashes cut from 2 CM slab S-4 (shared w/ Rm 105). Remnant R-118 tagged for Nurse Station 105 transaction ledge. Slabs 2–3: Reception 102 & Nurse Station 105 (SD-26118-102/105).

6 SD-2 SLAB LAYOUT / NESTING – SLAB 1

SCALE: 1/4" = 1'-0"

SAMPLE

SAMPLE – Fictional project for demonstration. All names, companies, quantities and figures are fictional. Prepared by Axentra Solutions as a portfolio work sample – not for construction.

AXENTRA SOLUTIONS
Drafting & Shop Drawing Services
[Phone] · [Email] · axentra-solutions.com

PROJECT
Riverside Medical Office Build-Out
1450 Riverbend Parkway, Suite 200
Anytown, ST 00000
Job no. 26-118

FABRICATOR / INSTALLER (CLIENT)
Summit Surfaces & Interiors, LLC
Casework & countertop subcontractor

GENERAL CONTRACTOR · ARCHITECT
Northgate Builders, Inc.
Lumen Architecture Studio

MATERIALS
QZ-1 3 cm quartz – "Glacier Mist", polished
PL-1 HPL – "Gray Linen" (PL-1), matte
Interior: white TFM · 3 mm PVC edgeband
Hardware: 110° concealed hinges, FEXT slides

REVISIONS

REV	DATE	DESCRIPTION	BY
0	09/14/26	Issued for approval	PPO
1	09/28/26	Sink CL moved per RFI-004; DW opening	PPO
2	10/06/26	Incorporate review notes; F.V. dims	PPO

ARCHITECT / GC REVIEW STAMP
☐ Approved ☑ Approved as noted
☐ Revise & resubmit ☐ Rejected
P. Nair, Lumen Architecture Studio – 10/02/26
Note: verify sink CL at rough-in (see Rev 1).

SAMPLE – Fictional project for demonstration. All names, companies and dimensions are fictional. Not for construction.

DRAWING TITLE
BREAK ROOM 118
COUNTERTOP & CASEWORK
DETAILS & SLAB LAYOUT

DRAWN: Axentra Drafting	CHECKED: D. Whitfield
DATE: 09/14/26	SCALE: AS NOTED
SHOP DWG NO.: SD-26118-118	FIELD VERIFIED: 10/05/26
SHEET	REVISION

SD-2 **2**