1 / A-1 KITCHEN

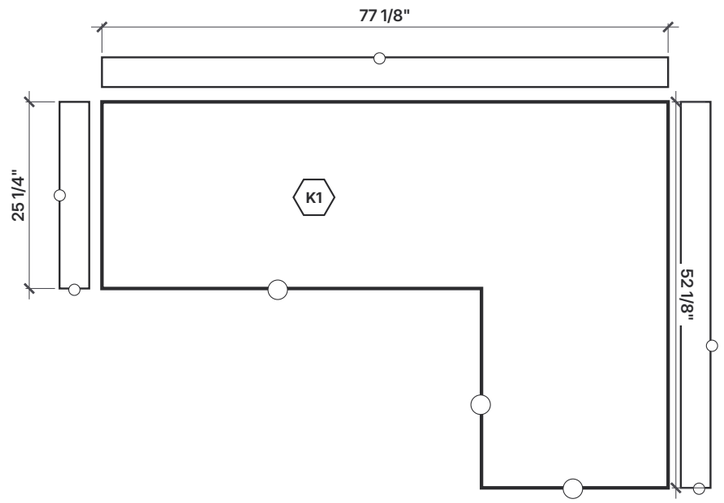

2 / A-1 BATH 1

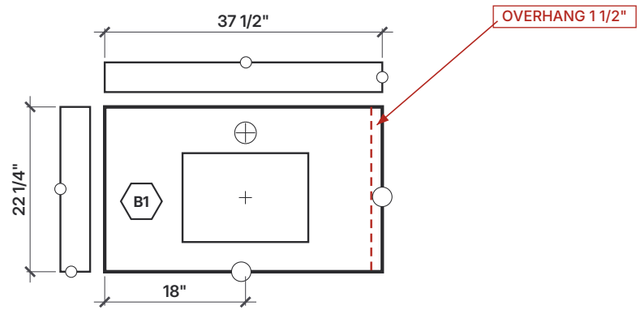

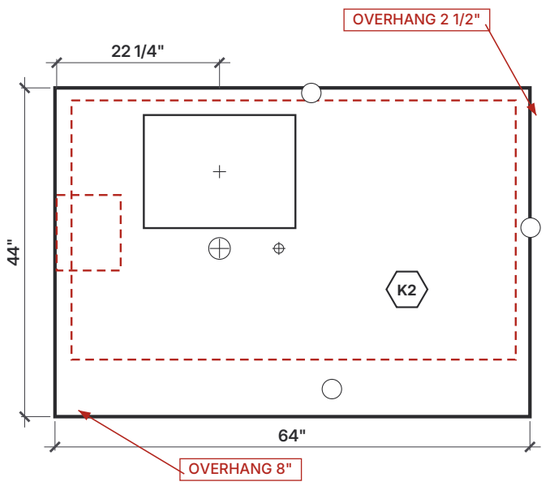

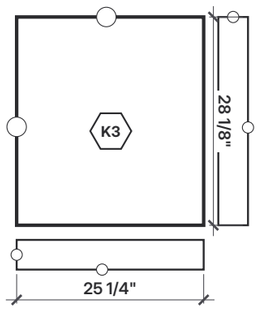

3 / A-1 BATH 2

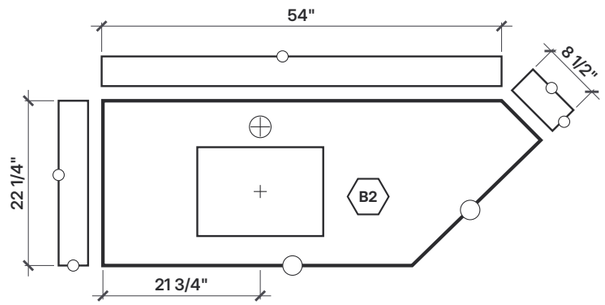

COUNTERTOP SCHEDULE

TAG	ROOM	SIZE (W x D) — PER LAYOUT	SPLASH	NOTES
K1	KITCHEN	77 1/8" x 52 1/8" L, 25 1/4" leg	BACK 77 1/8" + SIDES 25 1/4", 52 1/8"	L-shaped top
K2	KITCHEN	64" x 44"	—	Sink top, Cantrio KSS-105; overhang 2 1/2" / 8"
K3	KITCHEN	25 1/4" x 28 1/8"	SIDE 28 1/8" + 25 1/4" (bottom edge)	Separate top
B1	BATH 1	37 1/2" x 22 1/4"	BACK 37 1/2" + L SIDE 22 1/4"	Sink 18" to CL; overhang 1 1/2" right end
B2	BATH 2	54" x 22 1/4", angled R end	BACK 54" + L SIDE 22 1/4" + 8 1/2" @45°	Sink 21 3/4" to CL; 45° clipped back corner

Splash heights, thickness & quantity not specified on layout — confirm at approval.

GENERAL NOTES

1. All dimensions in inches, from the 04/23/2026 layout. Do not scale drawing.
2. Field verify all dimensions before fabrication.
3. Color: Simply Grey. Edge: eased & polished.
4. Sink: Cantrio KSS-105 (undermount cutouts shown at sink centerline).
5. Overhangs shown as red dashed lines.
6. Install date: 06/02/2026.
7. Fabrication starts only after signed approval.

LEGEND

- Countertop outline (cut)
- Backsplash / side splash
- Overhang line
- Eased & polished edge
- Faucet / fixture hole
- K1 Countertop tag
- Dimension string

EDGE PROFILE

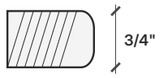

EASED & POLISHED

AXENTRA SOLUTIONS

AXENTRA SOLUTIONS
axentra-solutions.com | [Phone] | [Email]

PROJECT
SAMPLE KITCHEN

SCOPE
COUNTERTOP FABRICATION & INSTALL

SHEET TITLE
COUNTERTOP SHOP DRAWING

ROOMS
KITCHEN • BATH 1 • BATH 2

DRAWN BY	CHECKED BY
AXENTRA	AXENTRA QC
DATE 10/14/2026	LAYOUT DATE 04/23/2026
SCALE 3/8" = 1'-0"	INSTALL DATE 06/02/2026
COLOR SIMPLY GREY	SINK CANTRIO KSS-105
THICKNESS —	QUANTITY —
METAL ROD —	EDGE EASED & POLISHED

REVISIONS

REV	DATE	DESCRIPTION	BY
0	04/23/2026	ORIGINAL LAYOUT	—
A	10/14/2026	REDRAWN FOR APPROVAL	AX

CLIENT APPROVAL

APPROVED BY: _____

DATE: _____

Approval confirms dimensions, layout, color & edge. Field verify before fabrication.

FOR APPROVAL

NOT FOR FABRICATION UNTIL SIGNED

SAMPLE – Fictional project. Names & identifiers anonymized.

SHEET NO. **A-1**

SHEET 1 OF 1