AXENTRA SOLUTIONS

OUTSOURCED CONSTRUCTION OFFICE OPERATIONS

Work Sample Portfolio

Estimating · Bids · Purchasing · Bookkeeping · Shop Drawings · Project Management · Shop Services
For trade contractors – flooring, countertops, tile and cabinets.

FEATURED SAMPLE PROJECT (FICTIONAL)

Sample Project – Riverside Medical Office Build-Out

Trade contractor: Summit Surfaces & Interiors, LLC · GC: Northgate Builders, Inc. · Owner: Riverside Health Partners
10,200 SF medical office suite · flooring, tile, casework & countertops · base bid $306,900 · Sept–Dec 2026
One project carried through samples 01–07 – every number ties out from estimate to job cost.

SAMPLE – Fictional project for demonstration. All names, companies, quantities and figures are fictional.

Axentra Solutions
[Phone] · [Email] · axentra-solutions.com

What's inside

Eight deliverables we produce every week for trade contractors, shown on fictional sample projects.

01 **Estimating**
Room-by-room takeoff, pricing detail and estimate summary — Base bid $306,900

02 **Bid Management**
Bid log & pipeline, bid calendar, scope sheet, quote leveling — 15 bids tracked

03 **Purchasing**
Purchase order and material procurement log & schedule — PO $42,276.57

04 **Bookkeeping**
Monthly job-cost/WIP report, AP/AR aging, contractor P&L — September 2026 close

05 **Shop Drawings**
Vector casework & quartz countertop shop drawings (11x17) — 2 sheets, Rev 2

06 **Project Management**
Scope schedule, RFI, submittal & CO logs, weekly report — Status 10/14/26

07 **Shop Services**
Production schedule, work order & cut list, QC checklist — Shop load 4 crew

08 **Countertop Shop Drawing**
Kitchen & bath countertop layout for client approval (A3) — Sample Kitchen, Rev A

Project at a glance

Project	Sample Project – Riverside Medical Office Build-Out	**Base bid / revised**	$306,900 / $314,860
Trade contractor	Summit Surfaces & Interiors, LLC	**Flooring measured**	9,160 SF (4 finishes)
General contractor	Northgate Builders, Inc.	**Casework / tops**	308 LF / 366 SF
Owner · Architect	Riverside Health Partners · Lumen Architecture Studio	**Bid → award**	08/13/26 → 08/31/26
Address	1450 Riverbend Parkway, Suite 200, Anytown, ST 00000	**Substantial completion**	12/18/26 (our scope)

SAMPLE – Fictional project for demonstration. All names, companies, quantities and figures are fictional.

SAMPLE 01 ESTIMATING

Estimate Summary – Base Bid

Complete flooring, tile, casework and countertop estimate prepared from the bid documents for a trade subcontractor. Quantities are measured room-by-room, waste is applied by material, and labor is built from production rates so every number traces back to the takeoff.

PROJECT	Riverside Medical Office Build-Out
PREPARED FOR	Summit Surfaces & Interiors, LLC
BIDDING TO	Northgate Builders, Inc.
OWNER	Riverside Health Partners
BID DATE	08/13/26 2:00 PM
ESTIMATE NO.	EST-26118 Rev 0

BASE BID	FLOORING MEASURED	CASEWORK	LABOR	GROSS MARGIN
$306,900	**9,160 SF**	**308 LF**	**1,138 hrs**	**15.0%**
Lump sum, tax included	4 floor finishes, 21 room groups	174 LF base / 134 LF wall	Field + PM + drafting	OH + profit on bid

Estimate Summary by Division

All amounts in USD. Material includes freight-in; sales tax applied to materials only.

Div	Description	Material	Labor	Labor Hrs	Total	% of Bid
01	General Requirements	$8,930	$19,396	248.0	$28,326	9.2%
06	Wood Casework (06 41 16)	$84,150	$13,951	199.3	$98,101	32.0%
09	Finishes - Flooring & Tile	$52,884	$42,180	622.3	$95,064	31.0%
12	Countertops (12 36 61)	$21,498	$4,767	68.1	$26,265	8.6%
	Subtotal – direct cost	**$167,462**	**$80,294**	**1,137.7**	**$247,756**	**80.7%**
	Sales tax on materials @ 7.75%				$12,978	4.2%
	Overhead @ 10% of direct cost				$26,073	8.5%
	Profit @ 7%				$20,077	6.5%
	Rounding				$15.78	
	BASE BID (LUMP SUM)				**$306,900**	**100.0%**

Alternates (add / deduct to base bid)

Alt	Description	Amount
ALT-1	Moisture mitigation system (2-part epoxy) at SV-1 & PT-1 areas, 1,300 SF @ $5.85/SF	$7,600
ALT-2	Upgrade LVT-1 to 28 mil wear layer (Medical Grade Plus line)	$3,490
ALT-3	Delete wall cabinets at exam rooms (credit)	($18,250)

Basis of Estimate

- Drawings: Lumen Architecture Studio, A0.1–A9.2 and ID-101–ID-602, Bid Set dated 07/17/26; Addendum 01 (07/31/26) and Addendum 02 (08/07/26) acknowledged.
- Specifications: 06 41 16, 09 30 13, 09 65 13, 09 65 16, 09 65 19, 09 68 13, 12 36 61. Finish schedule ID-601.
- Labor at blended open-shop rates: flooring $66/hr, tile $72/hr, casework install $70/hr. Work performed in one continuous mobilization per phase, normal hours.
- Bid valid for 60 days. Detailed takeoff (p.2), pricing detail (p.3) and inclusions/exclusions (p.4) form part of this estimate.

SAMPLE – Fictional project for demonstration. All names, companies, quantities and figures are fictional.

Quantity Takeoff – Room by Room

Net measured quantities from ID-101 (floor finish plan), ID-401 (enlarged restrooms) and A8.1–A8.4 (casework elevations). Waste applied on p.3.

Room	Name	Floor Finish	Floor SF	Base Type	Base LF	Wall Tile SF	Base Cab LF	Wall Cab LF	Tall Cab EA	Quartz SF	Solid Surf. SF	Cutouts EA
101	Waiting / Reception	CPT-1	1,240	RB-1	165	–	–	–	–	–	–	–
102	Reception Desk	LVT-1	180	RB-1	58	–	18	–	–	52	–	–
103	Corridor A	LVT-1	1,120	RB-1	470	–	–	–	–	–	–	–
104	Corridor B	LVT-1	860	RB-1	360	–	–	–	–	–	–	–
105	Nurse Station	LVT-1	320	RB-1	60	–	16	10	–	28	–	–
106-117	Exam Rooms (12 @ 120 SF)	LVT-1	1,440	RB-1	528	–	72	72	–	–	156	12
118	Break Room	LVT-1	290	RB-1	70	–	14	10	1	31	–	1
119	Procedure Room 1	SV-1	240	FC	64	–	10	10	1	–	18	1
120	Procedure Room 2	SV-1	240	FC	64	–	10	10	1	–	18	1
121	Laboratory	SV-1	310	FC	72	–	20	14	2	–	38	1
122	Clean Utility	SV-1	110	FC	42	–	8	8	–	–	14	1
123	Soiled Utility	SV-1	95	FC	39	–	6	–	–	–	11	1
124	Public Restroom 1	PT-1	65	TB	34	240	–	–	–	–	–	–
125	Public Restroom 2	PT-1	65	TB	34	240	–	–	–	–	–	–
126	Staff Restroom	PT-1	60	TB	32	220	–	–	–	–	–	–
127	Patient Restroom	PT-1	70	TB	36	260	–	–	–	–	–	–
128-133	Offices (6 @ 130 SF)	LVT-1	780	RB-1	276	–	–	–	–	–	–	–
134	Conference	CPT-1	360	RB-1	78	–	–	–	–	–	–	–
135	Open Admin	CPT-1	1,050	RB-1	150	–	–	–	–	–	–	–
136	Medical Records	LVT-1	220	RB-1	60	–	–	–	–	–	–	–
138	Janitor	SV-1	45	FC	27	–	–	–	–	–	–	–
	TOTAL		**9,160**		**2,719**	**960**	**174**	**134**	**5**	**111**	**255**	**18**

Finish	LVT-1	CPT-1	SV-1	PT-1 floor	PT-2 wall	Tile base	Flash cove	RB-1 base
Net qty	5,210 SF	2,650 SF	1,040 SF	260 SF	960 SF	136 LF	308 LF	2,275 LF

Base types: RB-1 = 4" rubber cove base; FC = 6" integral flash cove (SV-1); TB = porcelain tile cove base. Rm 137 IT/Electrical is sealed concrete by GC (not included). Exam rooms and offices are typical rooms, measured once and multiplied.

SAMPLE – Fictional project for demonstration. All names, companies, quantities and figures are fictional.

Pricing Detail

Order quantity = net quantity × (1 + waste), rounded up. Labor = net quantity × production rate × crew rate.

Code	Description	Unit	Net Qty	Waste	Order Qty	Mat Unit	Material	Hrs/Unit	Labor Hrs	Rate	Labor	Total
DIVISION 01 – GENERAL REQUIREMENTS												
01 31 00	Project management, submittals & coordination	HR	60	–	60	$0.00	$0	1.000	60.0	$85	$5,100	$5,100
01 31 00	Field supervision (lead foreman)	HR	120	–	120	$0.00	$0	1.000	120.0	$78	$9,360	$9,360
01 33 23	Shop drawings - casework & countertops	HR	32	–	32	$0.00	$0	1.000	32.0	$80	$2,560	$2,560
01 56 39	Floor protection - ram board (finished floors)	SF	9,000	–	9,000	$0.32	$2,880	0.004	36.0	$66	$2,376	$5,256
01 55 00	Freight, delivery & material handling	LS	1	–	1	$3,850.00	$3,850	–	0.0	$66	$0	$3,850
01 54 00	Equipment: floor scrubber, RH test kits, small tools	LS	1	–	1	$2,200.00	$2,200	–	0.0	$66	$0	$2,200
	Division 01 subtotal						**$8,930**		**248.0**		**$19,396**	**$28,326**
DIVISION 06 – WOOD CASEWORK (06 41 16)												
06 41 16	PL-1 plastic laminate base cabinets (shop-built)	LF	174	–	174	$285.00	$49,590	0.650	113.1	$70	$7,917	$57,507
06 41 16	PL-1 plastic laminate wall cabinets (shop-built)	LF	134	–	134	$215.00	$28,810	0.550	73.7	$70	$5,159	$33,969
06 41 16	PL-1 tall storage cabinets 84" (shop-built)	EA	5	–	5	$1,150.00	$5,750	2.500	12.5	$70	$875	$6,625
	Division 06 subtotal						**$84,150**		**199.3**		**$13,951**	**$98,101**
DIVISION 09 – FINISHES - FLOORING & TILE												
09 65 19	LVT-1 luxury vinyl plank 7"x48", 20 mil, glue-down	SF	5,210	8%	5,627	$3.85	$21,664	0.030	156.3	$66	$10,316	$31,980
09 68 13	CPT-1 carpet tile 24"x24", quarter-turn	SF	2,650	5%	2,783	$3.10	$8,627	0.018	47.7	$66	$3,148	$11,776
09 65 16	SV-1 homogeneous sheet vinyl, heat-welded	SF	1,040	12%	1,165	$5.40	$6,291	0.062	64.5	$66	$4,257	$10,548
09 65 16	SV-1 integral flash cove 6" w/ cap & fillet	LF	308	5%	324	$1.10	$356	0.095	29.3	$66	$1,934	$2,290
09 30 13	PT-1 porcelain floor tile 12"x24", thinset	SF	260	10%	286	$5.95	$1,702	0.120	31.2	$72	$2,246	$3,948
09 30 13	PT-2 porcelain wall tile 3"x12", full-height wet walls	SF	960	12%	1,076	$5.30	$5,703	0.145	139.2	$72	$10,022	$15,725
09 30 13	PT-1 tile cove base 6"x12"	LF	136	8%	147	$6.25	$919	0.105	14.3	$72	$1,030	$1,948
09 65 13	RB-1 rubber cove base 4", coiled	LF	2,275	5%	2,389	$1.45	$3,464	0.024	54.6	$66	$3,604	$7,068
09 05 61	Floor prep: scrape, patch & skim (allowance)	SF	9,160	–	9,160	$0.35	$3,206	0.008	73.3	$66	$4,838	$8,044
09 65 13	Transition strips & reducers	EA	34	–	34	$28.00	$952	0.350	11.9	$66	$785	$1,737
	Division 09 subtotal						**$52,884**		**622.3**		**$42,180**	**$95,064**
DIVISION 12 – COUNTERTOPS (12 36 61)												
12 36 61	QZ-1 quartz countertop 3 cm, eased edge, incl. 4" splash	SF	111	–	111	$58.00	$6,438	0.200	22.2	$70	$1,554	$7,992
12 36 61	SS-1 solid surface countertop 1/2", incl. 4" splash	SF	255	–	255	$46.00	$11,730	0.180	45.9	$70	$3,213	$14,943
12 36 61	Undermount sink cutouts, polished (sinks by plumber)	EA	18	–	18	$185.00	$3,330	–	0.0	$70	$0	$3,330
	Division 12 subtotal						**$21,498**		**68.1**		**$4,767**	**$26,265**
	TOTAL DIRECT COST (before tax & markup)						**$167,462**		**1,137.7**		**$80,294**	**$247,756**

SAMPLE – Fictional project for demonstration. All names, companies, quantities and figures are fictional.

Inclusions

- Furnish & install all LVT-1, CPT-1, SV-1, PT-1, PT-2 per finish schedule ID-601, incl. adhesives, setting materials & grout.
- Integral flash cove at all SV-1 rooms; heat-welded seams; tile cove base at restrooms; RB-1 base elsewhere.
- Normal floor prep: scraping, crack/divot patching and skim coat up to 1/8" (9,160 SF allowance).
- Shop-built PL-1 casework per AWI Custom grade, incl. hardware, fillers, finished end panels & ADA knee-space panels.
- QZ-1 3 cm quartz and SS-1 solid surface tops with 4" splashes; 18 polished undermount sink cutouts.
- Shop drawings, product data & samples; field verification of casework dimensions prior to fabrication.
- Ram-board protection of finished floors through our scope completion; 2% attic stock of each floor finish.

Exclusions

- Moisture mitigation / RH testing remediation (see ALT-1); floor leveling beyond 1/8" (unit price $2.95/SF per 1/8").
- Sinks, faucets, appliances, plumbing & electrical connections; in-wall blocking (by GC).
- Demolition of existing finishes, abatement, sealed concrete at Rm 137, wall protection & corner guards.
- Performance & payment bond (available at 1.4% of contract), permits, testing & inspection fees.
- Overtime, after-hours or phased work beyond two mobilizations per scope.

Clarifications & Qualifications

- Slab to be broom-clean, dry, and within ASTM F710 tolerances; HVAC operating at 65–85 °F for 48 hrs before flooring.
- Casework installed after drywall finish & prime coat; countertops templated after casework is set and secured.
- Pricing based on manufacturer basis-of-design products listed in the finish schedule; substitutions offered separately.
- Material escalation: pricing held for orders released by 10/15/26.

Waste & Production Factors Used

Material	Waste	Basis	Production rate	Crew
LVT-1 plank	8%	Plank pattern, corridor run-outs	0.030 hr/SF (33 SF/hr)	Flooring
CPT-1 carpet tile	5%	Quarter-turn, minimal cut-off	0.018 hr/SF (56 SF/hr)	Flooring
SV-1 sheet vinyl	12%	6'-6" roll width, seam layout	0.062 hr/SF (16 SF/hr)	Flooring
PT-1 / PT-2 tile	10% / 12%	Large format, 1/3 offset	0.120 / 0.145 hr/SF	Tile
Casework	–	Shop-built, net LF	0.65 hr/LF base, 0.55 hr/LF wall	Casework
Countertops	–	Fabricator template & yield	0.20 hr/SF QZ, 0.18 hr/SF SS	Casework

Prepared by	Reviewed by	Status
Axentra Estimating Team (estimator: J. Ramirez)	D. Whitfield, Summit Surfaces & Interiors	Submitted 08/13/26 – awarded 08/31/26

SAMPLE

SAMPLE 02 BID MANAGEMENT

Bid Log & Pipeline Tracker

Every invitation to bid is logged on receipt and tracked through due date, submission, follow-up and award. The log feeds the bid calendar, the go/no-go decision and the monthly hit-rate report for the contractor.

PREPARED FOR	Summit Surfaces & Interiors, LLC
FEATURED BID	B26-055 – Riverside Medical Office Build-Out
FEATURED GC	Northgate Builders, Inc.
PERIOD	06/01/26 – 10/14/26
UPDATED	10/14/26
MAINTAINED BY	Axentra Bid Desk

BIDS SUBMITTED	HIT RATE (COUNT)	HIT RATE ($)	AWARDED VOLUME	OPEN PIPELINE
12	56%	68%	$1,096,350	$409,700
Jun – Oct 2026	5 won of 9 decided	Won $ / decided $	5 contracts	3 bids awaiting award

Bid Log

Bid No.	Project	GC / Client	Scope	Due	Bid Amount	Status	Notes / Next Action
B26-041	Harbor View Dental Clinic TI	Crestline Construction	Flooring, casework	06/18/26	$142,800	Won	Job 26-097
B26-044	Oakmont Senior Living – Phase 2	Pinecrest Builders	Flooring, tile	06/25/26	$486,300	Won	Job 26-104
B26-047	Cedar Ridge Elementary Restroom Reno	Bellwether Contracting	Tile	07/09/26	$98,450	Won	Job 26-109
B26-049	Lakeside Retail Shell – Units 4-6	Crestline Construction	Flooring	07/16/26	$61,900	Won	Job 26-112
B26-050	Maple Court Apartments Clubhouse	Ironwood General	Countertops, cabinets	07/21/26	$88,200	Lost	3.8% over low
B26-052	Bayside Urgent Care	Northgate Builders, Inc.	Flooring, casework	07/28/26	$214,600	Lost	Awarded on schedule
B26-053	Westfield Branch Library Refresh	Westfield Public Works	Carpet tile, base	08/04/26	$132,750	Lost	Public bid, 2nd of 6
B26-055	**Riverside Medical Office Build-Out**	**Northgate Builders, Inc.**	**Flooring, tile, casework, tops**	**08/13/26**	**$306,900**	**Won**	**Job 26-118**
B26-056	Willow Creek Dental	Ironwood General	Flooring, countertops	08/20/26	$76,400	Lost	Owner value-engineered
B26-058	Pinecrest Senior Center Kitchen	Pinecrest Builders	Countertops, casework	08/27/26	$54,300	Pending	Award expected 10/20
B26-060	Elmwood Office Tower – Floor 6	Ironwood General	Carpet tile, LVT	09/10/26	$118,900	Pending	Shortlisted (2 of 4)
B26-061	Northshore Pediatrics	Northgate Builders, Inc.	Flooring, casework, tops	09/24/26	$236,500	Submitted	Post-bid interview 10/16
B26-063	Hillcrest Fitness Center	Bellwether Contracting	Rubber sports flooring	09/30/26	–	No Bid	Outside core scope
B26-064	Brookside Dental – Phase 2	Crestline Construction	Flooring, casework	10/22/26	–	In Progress	Takeoff 80% complete
B26-066	Canyon View Clinic	Bellwether Contracting	Flooring, tile, tops	10/29/26	–	In Progress	ITB received 10/08

Highlighted row = featured bid used throughout this portfolio. Hit rate excludes No Bid, Pending, Submitted and In Progress.

SAMPLE – Fictional project for demonstration. All names, companies, quantities and figures are fictional.

Axentra Solutions · [Phone] · [Email] · axentra-solutions.com

Bid Calendar – August 2026

All bid-related milestones for the estimating team. Bid due times are local; submissions are sent 2 hours before deadline.

SUN	MON	TUE	WED	THU	FRI	SAT
						1
2	3 Westfield Library – final addendum review	4 **DUE** Westfield Library 11:00 AM Riverside MOB RFI deadline	5	6 Riverside – send supplier RFQs (flooring, tile, quartz)	7 Riverside Addendum 02 issued – reviewed	8
9	10 Riverside supplier quotes due 12:00 PM	11 Riverside quote leveling & scope sheet	12 Riverside estimate review w/ owner (go-final)	13 **DUE** Riverside MOB 2:00 PM Bid confirmation received	14 Pinecrest Senior Center pre-bid walk 9:00 AM	15
16	17	18 Pinecrest Senior Ctr RFI deadline	19	20 **DUE** Willow Creek Dental 3:00 PM	21 Riverside post-bid scope review w/ Northgate	22
23	24 Elmwood Tower ITB received – go/no-go	25	26 Northshore Pediatrics pre-bid walk 10:00 AM	27 **DUE** Pinecrest Senior Center 2:00 PM	28	29
30	31 **AWARD** Riverside MOB – LOI received					

Legend: ■ **Bid due** ■ **Pre-bid walk / site visit** ■ **RFI / addendum** ■ **Internal milestone** ■ **Award**

SAMPLE – Fictional project for demonstration. All names, companies, quantities and figures are fictional.

Axentra Solutions · [Phone] · [Email] · axentra-solutions.com

Bid Scope Sheet – B26-055 Riverside Medical Office Build-Out

Submitted to Northgate Builders, Inc. with the bid form on 08/13/26. Used at the post-bid scope review (08/21/26) to confirm apples-to-apples coverage.

Spec	Scope Item	Status	Quantity / Notes
06 41 16	Plastic laminate casework, AWI Custom, shop-built	INCL	174 LF base / 134 LF wall / 5 tall
06 41 16	Cabinet hardware, fillers, end panels, ADA knee-space panels	INCL	Per hardware schedule HW-6
06 41 16	In-wall blocking & backing for wall cabinets	EXCL	By GC framing
12 36 61	QZ-1 quartz tops 3 cm with 4" splash	INCL	113 SF – reception, nurse, break
12 36 61	SS-1 solid surface tops with 4" splash	INCL	255 SF – exam, procedure, lab, utility
12 36 61	Sink cutouts (undermount, polished)	INCL	18 EA; sinks & faucets by plumbing
09 65 19	LVT-1 luxury vinyl plank, glue-down	INCL	5,210 SF net
09 68 13	CPT-1 carpet tile	INCL	2,650 SF net
09 65 16	SV-1 sheet vinyl with 6" integral flash cove	INCL	1,040 SF / 308 LF cove
09 30 13	PT-1 floor tile, PT-2 wall tile, tile cove base	INCL	260 SF floor / 960 SF wall / 136 LF base
09 65 13	RB-1 rubber base & transitions	INCL	2,275 LF / 34 EA
09 05 61	Floor prep up to 1/8" (scrape, patch, skim)	INCL	Beyond 1/8" at unit price
09 05 61	Moisture testing (RH, ASTM F2170) & mitigation	ALT	ALT-1; testing by flooring sub
01 56 39	Protection of finished floors	INCL	Ram board through our completion
02 41 19	Removal of existing finishes / abatement	EXCL	By GC / owner
01 45 00	Performance & payment bond	EXCL	Available at 1.4%

Bid Form	Amount
BASE BID – lump sum	**$306,900**
ALT-1 Moisture mitigation, SV-1 & PT-1 areas	$7,600
ALT-2 Upgrade LVT-1 to 28 mil wear layer	$3,490
ALT-3 Delete exam room wall cabinets (credit)	($18,250)

Unit Prices	Unit	Price
Floor leveling, per 1/8" depth	SF	$2.95
Moisture mitigation (2-part epoxy)	SF	$5.85
Additional RB-1 base, installed	LF	$3.40
Additional LVT-1, installed	SF	$6.35
Additional PL base cabinet	LF	$385.00

Bid Logistics	
Addenda acknowledged	01 (07/31), 02 (08/07)
Bid valid	60 days
Lead times	LVT 3 wks · quartz 4 wks
Duration	6 weeks on site, 2 phases
Crew	Flooring 4 · Tile 2 · Casework 3

SAMPLE

SAMPLE – Fictional project for demonstration. All names, companies, quantities and figures are fictional.

Bid Leveling – Flooring Material Package (Riverside MOB)

Supplier quotes received 08/10/26 for the resilient & carpet package, leveled to the same quantities (estimate order qty) and scope. Tile and quartz packages leveled separately.

Item	Unit	Qty	Budget Unit	Budget Total	Keystone Unit	Keystone Total	Midland Unit	Midland Total	Coastline Unit	Coastline Total
LVT-1 luxury vinyl plank, 20 mil	SF	5,627	$3.85	$21,664	$3.62	$20,370	$3.71	$20,876	$3.49	$19,638
CPT-1 carpet tile 24x24	SF	2,783	$3.10	$8,627	$2.98	$8,293	$2.89	$8,043	$3.05	$8,488
SV-1 homogeneous sheet vinyl	SF	1,165	$5.40	$6,291	$5.18	$6,035	$5.45	$6,349	$5.10	$5,942
SV-1 flash cove cap & fillet	LF	324	$1.10	$356	$1.05	$340	$1.12	$363	**EXCL.**	–
RB-1 rubber cove base 4"	LF	2,389	$1.45	$3,464	$1.38	$3,297	$1.41	$3,368	$1.36	$3,249
Transition strips & reducers	EA	34	$28.00	$952	$26.50	$901	$27.00	$918	$29.00	$986
Quoted subtotal				**$41,355**		**$39,236**		**$39,918**		**$38,303**
Plug: excluded items at budget						–		–		$356
Adjust: adhesive not included						incl.		incl.		$1,494
Adjust: freight to jobsite						incl.		$650		$1,250
LEVELED TOTAL				**$41,355**		**$39,236**		**$40,568**		**$41,403**
Variance to budget						($2,119)		($787)		$49

Qualification	Keystone Flooring Supply	Midland Floor Distributors	Coastline Surfaces Wholesale
Lead time (LVT / SV / CPT)	2–3 wks / 4 wks / 3 wks	3–4 wks / 4 wks / 3 wks	6–8 wks (import) / 5 wks / 3 wks
Basis-of-design products	Yes – all items	Yes – all items	LVT-1 as equal (submittal risk)
Quote validity / price hold	60 days, held to 10/15/26	30 days	30 days
Payment terms	Net 30, 2% 10	Net 30	50% deposit, net 30
Attic stock / returns	2% included, 15% restock	Not included	Not included
Leveled rank	**1 – RECOMMENDED**	**2**	**3**

Recommendation: Award the flooring material package to **Keystone Flooring Supply** at $39,235.80 (plus tax). Lowest leveled cost, $2,119 under budget, basis-of-design products and the shortest lead time. Coastline is lowest on paper but highest after adhesive, freight and plug adjustments, and its import LVT puts the 11/16/26 LVT start at risk. Released as PO-26118-003 (see Purchasing sample).

SAMPLE – Fictional project for demonstration. All names, companies, quantities and figures are fictional.

SAMPLE 03 PURCHASING

Purchase Order PO-26118-003

Purchase orders are written from the approved submittals and the leveled quote, with exact quantities, colors, staged delivery dates and jobsite instructions, so the buyout ties back to the estimate and the schedule.

BUYER	Summit Surfaces & Interiors, LLC
VENDOR	Keystone Flooring Supply
JOB	26-118 – Riverside MOB
PO DATE	09/28/26
TERMS	Net 30, 2% 10
QUOTE REF.	KFS-Q-58817 (08/10/26)

VENDOR	BILL TO	SHIP TO (JOBSITE)
Keystone Flooring Supply	**Summit Surfaces & Interiors, LLC**	**Riverside Medical Office Build-Out**
[Street address]	c/o Accounts Payable	1450 Riverbend Pkwy, Suite 200
Anytown, ST 00000	[Street address]	Anytown, ST 00000
Attn: Order Desk – R. Delgado	Anytown, ST 00000	Attn: M. Ellison, Northgate Supt.
[Phone] · [Email]	Ref. job 26-118 on all invoices	Call 24 hrs before delivery

Ln	Product / Description	Qty	Unit	Unit Price	Extension	Delivery
1	**LVT-1 – Meridian MedLoc LVT 7"x48", 20 mil, 2.5 mm** Color: Driftwood Ash (ML-204)	5,627	SF	$3.62	$20,369.74	D2 – 11/11/26
2	**CPT-1 – Fieldline Modular carpet tile 24"x24"** Color: Slate Weave (FL-118), quarter-turn	2,783	SF	$2.98	$8,293.34	D2 – 11/11/26
3	**SV-1 – Clinica Homogeneous sheet vinyl 6'-6" roll** Color: Mist Grey (CH-31), incl. weld rod	1,165	SF	$5.18	$6,034.70	D1 – 10/28/26
4	**SV-1 flash cove cap strip & fillet** 6" cove, extruded vinyl cap	324	LF	$1.05	$340.20	D1 – 10/28/26
5	**RB-1 – 4" rubber cove base, coiled 120' rolls** Color: Pewter (RB-07), 1/8" gauge	2,389	LF	$1.38	$3,296.82	D2 – 11/11/26
6	**Transition strips & reducers (assorted, per schedule)** Rubber, color-matched to RB-1	34	EA	$26.50	$901.00	D2 – 11/11/26
	Subtotal				**$39,235.80**	
	Sales tax @ 7.75%				**$3,040.77**	
	Freight to jobsite				**Included**	
	PURCHASE ORDER TOTAL				**$42,276.57**	

Staged deliveries: D1 = 10/28/26 (SV-1 & cove cap for Procedure/Lab rooms); D2 = 11/11/26 (LVT-1, CPT-1, RB-1, transitions). Deliveries 7:00 AM–2:00 PM, Mon–Fri, via rear dock (Bay 3). Liftgate required.

Dye lots: each product to ship from a single dye/production lot. Include 2% attic stock in original cartons, labeled "Attic Stock – Riverside MOB."

Submittals: products per approved submittals 09 65 13-01, 09 65 16-01, 09 65 19-01, 09 68 13-01. No substitutions without written approval.

Pricing: per leveled quote KFS-Q-58817, held through 10/15/26. Invoice per delivery, referencing PO and job number. Packing slips to accompany each delivery.

Authorized by (Buyer)	Vendor acceptance	Issued by
_____ D. Whitfield, Summit Surfaces & Interiors	_____ Keystone Flooring Supply	Axentra Purchasing Desk for Summit Surfaces & Interiors

SAMPLE – Fictional project for demonstration. All names, companies, quantities and figures are fictional.

Material Procurement Log & Schedule – Job 26-118

Status as of 10/14/26. Need-by dates derived from the project schedule (see Project Management sample). Budget = estimate material cost (pre-tax). ETA reflects scheduled (staged) release, not vendor lead time.

Material	Vendor	PO No.	Submittal	Sub. Status	Lead (wks)	Ordered	ETA	Need On Site	Float (days)	Status	Budget	Committed	Variance
PL-1 TFM panels, HPL laminate, edgebanding	Cascade Panel & Hardware	PO-26118-001	06 41 16-01	Approved	2	09/30	10/08	10/12	4	Received	$21,400	$20,960	$440
Cabinet hardware (hinges, slides, pulls)	Cascade Panel & Hardware	PO-26118-001	06 41 16-02	Approved	2	09/30	10/08	10/12	4	Received	$6,950	$7,120	($170)
QZ-1 quartz slabs 3 cm, 126"x63" (3 slabs)	Stonebridge Slab Supply	PO-26118-002	12 36 61-01	Approved	2–3	10/05	10/23	11/06	14	Ordered	$4,750	$4,440	$310
LVT-1 luxury vinyl plank	Keystone Flooring Supply	PO-26118-003	09 65 19-01	Approved	3	09/28	11/11	11/13	2	Ordered	$21,664	$20,370	$1,294
CPT-1 carpet tile	Keystone Flooring Supply	PO-26118-003	09 68 13-01	Approved	3	09/28	11/11	11/16	5	Ordered	$8,627	$8,293	$334
SV-1 sheet vinyl + flash cove cap	Keystone Flooring Supply	PO-26118-003	09 65 16-01	Approved	4	09/28	10/28	11/02	5	Ordered	$6,647	$6,375	$272
RB-1 rubber base & transitions	Keystone Flooring Supply	PO-26118-003	09 65 13-01	Approved	3	09/28	11/11	12/07	26	Ordered	$4,416	$4,198	$218
PT-1 floor tile 12x24 + setting materials	Harbor Tile & Stone	PO-26118-004	09 30 13-01	Approved	4	09/30	10/28	11/02	5	Ordered	$1,702	$1,655	$47
PT-2 wall tile 3x12 + setting materials	Harbor Tile & Stone	PO-26118-004	09 30 13-02	Approved	4	09/30	10/28	11/02	5	Ordered	$5,703	$5,520	$183
PT-1 tile cove base	Harbor Tile & Stone	PO-26118-004	09 30 13-01	Approved	4	09/30	10/28	11/02	5	Ordered	$919	$940	($21)
SS-1 solid surface sheets 1/2"	Apex Solid Surface Distributors	PO-26118-005	12 36 61-02	Approved as Noted	2	10/12	10/26	11/02	7	Ordered	$5,100	$4,880	$220
Moisture mitigation epoxy (CO-001)	Keystone Flooring Supply	PO-26118-006	09 05 61-01	Approved	1–2	10/09	10/21	10/26	5	Ordered	$2,388	$2,310	$78
Floor protection – ram board	Keystone Flooring Supply	(to release)	n/a	–	1	10/26	11/02	11/16	14	Not Started	$2,880	–	–
TOTAL											**$93,146**	**$87,061**	**$3,205**

Float = need-on-site minus ETA. Variance = budget minus committed (positive = buyout savings) on released POs. Ram board not yet released; budget carried.

Delivery vs. need-by (key packages)

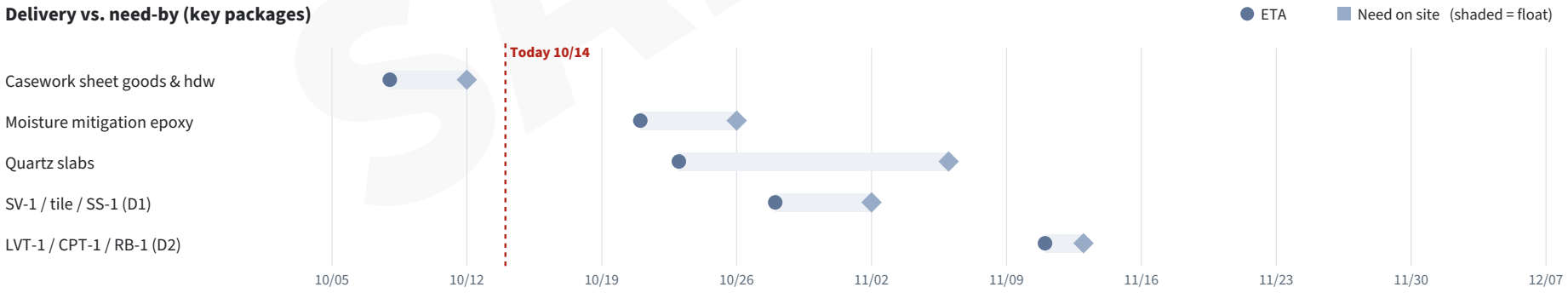

SAMPLE – Fictional project for demonstration. All names, companies, quantities and figures are fictional.

Axentra Solutions · [Phone] · [Email] · axentra-solutions.com

SAMPLE 04 BOOKKEEPING

Monthly Job-Cost & WIP Report

Month-end close for a trade contractor: job costs posted by cost code, percent complete (cost-to-cost), earned revenue, over/under billings, AP/AR aging and a contractor-format P&L, ready for the owner, bank or bonding agent.

COMPANY	Summit Surfaces & Interiors, LLC
PERIOD	September 1–30, 2026
BASIS	Percentage of completion
JOBS OPEN	5 active contracts
CLOSED	10/07/26
PREPARED BY	Axentra Bookkeeping Desk

SEPT EARNED REVENUE	SEPT GROSS PROFIT	BACKLOG	NET OVER/(UNDER) BILLED	AR / AP
$217,431	**$39,151**	**$546,481**	**($9,259)**	**$362k / $81k**
5 active jobs	18.0% margin	Contract remaining to earn	Asset if under-billed	Excl. retainage

Job Summary – Work in Progress (as of 09/30/26)

Job	Project / Customer	Orig. Contract	Approved COs	Revised Contract	Est. Total Cost	Est. GP %	Cost This Month	Cost to Date	% Complete	Earned Revenue	Billed to Date	Over/(Under) Billed
26-097	**Harbor View Dental Clinic TI** Crestline Construction	$142,800	$6,350	$149,150	$121,600	18.5%	$11,950	$110,250	90.7%	$135,229	$141,200	$5,971
26-104	**Oakmont Senior Living – Ph 2** Pinecrest Builders	$486,300	$12,480	$498,780	$409,900	17.8%	$96,850	$249,250	60.8%	$303,296	$289,500	($13,796)
26-109	**Cedar Ridge Elem. Restroom Reno** Bellwether Contracting	$98,450	$0	$98,450	$80,700	18.0%	$34,600	$73,500	91.1%	$89,666	$87,600	($2,066)
26-112	**Lakeside Retail Shell – Units 4-6** Crestline Construction	$61,900	$0	$61,900	$50,200	18.9%	$28,400	$28,400	56.6%	$35,019	$34,000	($1,019)
26-118	**Riverside Medical Office Build-Out** Northgate Builders, Inc.	$306,900	$2,140	$309,040	$262,487	15.1%	$6,480	$6,480	2.5%	$7,629	$9,280	$1,651
	TOTAL	**$1,096,350**	**$20,970**	**$1,117,320**	**$924,887**	**17.2%**	**$178,280**	**$467,880**		**$570,839**	**$561,580**	**($9,259)**

% complete = cost to date ÷ estimated total cost. Earned revenue = revised contract × % complete. Over-billings are carried as a liability, under-billings as an asset on the balance sheet. Job 26-118 CO-001 ($5,820) approved 10/09/26 – included in October.

SAMPLE – Fictional project for demonstration. All names, companies, quantities and figures are fictional.

Axentra Solutions · [Phone] · [Email] · axentra-solutions.com

Job-Cost Detail by Cost Code – Job 26-118 Riverside Medical Office Build-Out

Original budget = estimate EST-26118 direct cost (incl. sales tax). Committed = open purchase orders as of 09/30/26.

Code	Description	Original Budget	Approved CO Budget	Revised Budget	Committed (POs)	Cost This Month	Cost to Date	Est. to Complete	Projected Final	Variance Fav/(Unfav)
01-100	Project management & submittals	$5,100	–	$5,100	–	$2,890	$2,890	$2,510	$5,400	($300)
01-110	Field supervision & verification	$9,360	–	$9,360	–	$620	$620	$8,740	$9,360	–
01-120	Shop drawings	$2,560	–	$2,560	–	$2,560	$2,560	–	$2,560	–
01-200	Protection, freight, equipment	$11,306	–	$11,306	–	$410	$410	$10,896	$11,306	–
06-100	Casework material & shop fabrication	$84,150	–	$84,150	$28,080	–	–	$84,150	$84,150	–
06-200	Casework installation labor	$13,951	–	$13,951	–	–	–	$13,951	$13,951	–
09-100	Flooring & tile material	$52,884	–	$52,884	$47,351	–	–	$50,557	$50,557	$2,327
09-200	Flooring & tile labor	$42,180	–	$42,180	–	–	–	$42,180	$42,180	–
12-100	Countertop material & fabrication	$21,498	$1,753	$23,251	–	–	–	$23,251	$23,251	–
12-200	Countertop installation labor	$4,767	–	$4,767	–	–	–	$4,767	$4,767	–
90-000	Sales tax on materials	$12,978	–	$12,978	–	–	–	$12,798	$12,798	$180
	TOTAL JOB 26-118	**$260,734**	**$1,753**	**$262,487**	**$75,431**	**$6,480**	**$6,480**	**$253,800**	**$260,280**	**$2,207**

- **Buyout savings:** flooring & tile packages committed $2,327 under budget (Keystone $2,119, Harbor Tile $208); projected final for 09-100 reduced accordingly, with a matching reduction in sales tax.
- **CO-002** (quartz waterfall panels, +$2,140 revenue / +$1,753 cost) approved 09/29/26 and loaded to 12-100.
- **01-100** forecast +$300 for additional RFI and submittal coordination (RFI-003 to RFI-006).
- **Projected job gross profit:** $309,040 revised contract – $260,280 projected cost = **$48,760 (15.8%)** vs. 15.1% at bid-day budget.

September Cost by Category – All Jobs

Job	Materials	Labor	Subcontract	Equip. / Other	Total
26-097 Harbor View Dental Clinic TI	$2,850	$8,400	$0	$700	$11,950
26-104 Oakmont Senior Living – Ph 2	$41,200	$46,300	$6,500	$2,850	$96,850
26-109 Cedar Ridge Elem. Restroom Reno	$9,800	$22,900	$0	$1,900	$34,600
26-112 Lakeside Retail Shell – Units 4-6	$17,350	$10,250	$0	$800	$28,400
26-118 Riverside Medical Office Build-Out	$410	$6,070	$0	$0	$6,480
TOTAL (ties to P&L cost of revenue)	**$71,610**	**$93,920**	**$6,500**	**$6,250**	**$178,280**

SAMPLE – Fictional project for demonstration. All names, companies, quantities and figures are fictional.

Accounts Receivable Aging – as of 09/30/26

Aged by invoice date. Retainage shown separately and not aged (due at completion).

Customer	Job	Invoice	Inv. Date	Current (0-30)	31-60	61-90	Over 90	Total Due	Retainage Held
Crestline Construction	26-097	PA-06	09/25/26	$11,200	–	–	–	$11,200	$14,100
Crestline Construction	26-097	PA-05	08/25/26	–	$10,840	–	–	$10,840	–
Crestline Construction	26-112	PA-01	09/25/26	$30,600	–	–	–	$30,600	$3,400
Pinecrest Builders	26-104	PA-04	09/25/26	$112,300	–	–	–	$112,300	$28,950
Pinecrest Builders	26-104	PA-03	08/25/26	–	$96,400	–	–	$96,400	–
Pinecrest Builders	26-104	PA-02 short-pay	07/25/26	–	–	$8,150	–	$8,150	–
Bellwether Contracting	26-109	PA-02	09/25/26	$37,900	–	–	–	$37,900	$8,760
Bellwether Contracting	26-109	PA-01	08/25/26	–	$41,200	–	–	$41,200	–
Northgate Builders, Inc.	26-118	PA-01	09/25/26	$8,352	–	–	–	$8,352	$928
Bayview Property Group	25-212	Final retention	06/12/26	–	–	–	$4,615	$4,615	–
TOTAL				**$200,352**	**$148,440**	**$8,150**	**$4,615**	**$361,557**	**$56,138**
% of total				*55.4%*	*41.1%*	*2.3%*	*1.3%*	*100.0%*	

Collection notes: Pinecrest PA-02 short-pay ($8,150) tied to unsigned CO-03 on Oakmont – CO executed 10/06, payment expected with October cycle. Bayview final retention (Job 25-212): closeout docs re-sent 09/18; second notice sent 10/01. DSO (90-day): 46 days.

Accounts Payable Aging – as of 09/30/26

Open vendor invoices entered and coded to jobs. Early-pay discounts flagged for the 10/10 check run.

Vendor	Open Inv.	Current (0-30)	31-60	61-90	Over 90	Total	Notes
Keystone Flooring Supply	3	$28,450	–	–	–	$28,450	2% 10 discount – pay by 10/10
Harbor Tile & Stone	4	$14,820	$3,210	–	–	$18,030	31-60: disputed freight, credit req.
Ridgeline Carpet Tile Co.	2	$9,870	$4,400	–	–	$14,270	Pay 31-60 on 10/10 run
Cascade Panel & Hardware	3	$6,180	–	–	–	$6,180	
Stonebridge Slab Supply	1	$5,920	–	–	–	$5,920	Oakmont vanity slabs
Metro Equipment Rental	2	$1,150	–	–	–	$1,150	
Fleet fuel card	1	$2,340	–	–	–	$2,340	
Insurance premium finance	1	$4,150	–	–	–	$4,150	
Valley Waste & Recycling	2	–	–	$640	–	$640	Billing error – resolved 10/05
TOTAL	**19**	**$72,880**	**$7,610**	**$640**	**$0**	**$81,130**	

SAMPLE – Fictional project for demonstration. All names, companies, quantities and figures are fictional.

Axentra Solutions · [Phone] · [Email] · axentra-solutions.com

Profit & Loss Statement – Contractor Format

Summit Surfaces & Interiors, LLC. Revenue recognized on percentage-of-completion; cost of revenue = job costs posted (ties to job-cost report).

	September 2026	% Rev	Year to Date	% Rev
Contract revenue (earned)	**$217,431**	**100.0%**	**$1,941,431**	**100.0%**
Cost of revenue				
Direct materials	$71,610	32.9%	$619,610	31.9%
Direct labor & burden	$93,920	43.2%	$722,420	37.2%
Subcontractors	$6,500	3.0%	$118,900	6.1%
Equipment & other job costs	$6,250	2.9%	$70,650	3.6%
Total cost of revenue	**$178,280**	**82.0%**	**$1,531,580**	**78.9%**
GROSS PROFIT	**$39,151**	**18.0%**	**$409,851**	**21.1%**
Operating expenses				
Office & estimating salaries	$11,800	5.4%	$106,200	5.5%
Outsourced back-office services	$4,500	2.1%	$40,500	2.1%
Shop & office rent	$4,800	2.2%	$43,200	2.2%
Vehicles & fuel	$2,650	1.2%	$23,250	1.2%
Insurance (GL, auto, WC admin)	$2,900	1.3%	$26,100	1.3%
Utilities & phone	$860	0.4%	$7,760	0.4%
Software & IT	$540	0.2%	$4,840	0.2%
Professional fees	$450	0.2%	$4,550	0.2%
Marketing & bid services	$300	0.1%	$2,900	0.1%
Depreciation	$1,450	0.7%	$13,050	0.7%
Total operating expenses	**$30,250**	**13.9%**	**$272,350**	**14.0%**
Operating income	**$8,901**	**4.1%**	**$137,501**	**7.1%**
Interest expense (equipment line)	($410)	-0.2%	($3,810)	-0.2%
NET INCOME (before owner taxes)	**$8,491**	**3.9%**	**$133,691**	**6.9%**

Monthly revenue & gross profit – 2026 YTD

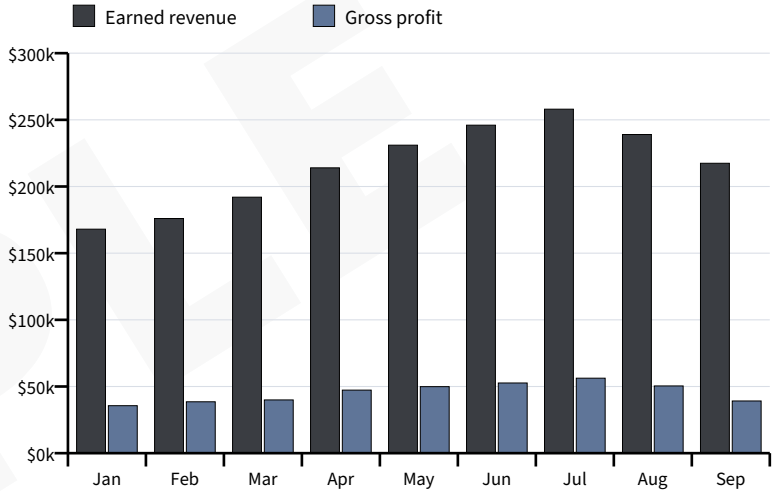

Key ratios (YTD)	
Gross margin	21.1%
Overhead as % of revenue	14.0%
Net margin	6.9%
Backlog / avg. monthly revenue	2.5 months
Current AR / AP ratio	4.5x

September revenue is below the YTD run-rate as Lakeside and Riverside are early in their cost curves and Harbor View is in close-out; October earned revenue is forecast at ~$265k as Riverside casework fabrication and Oakmont Phase 2 flooring peak. Unaudited – management use only.

SAMPLE

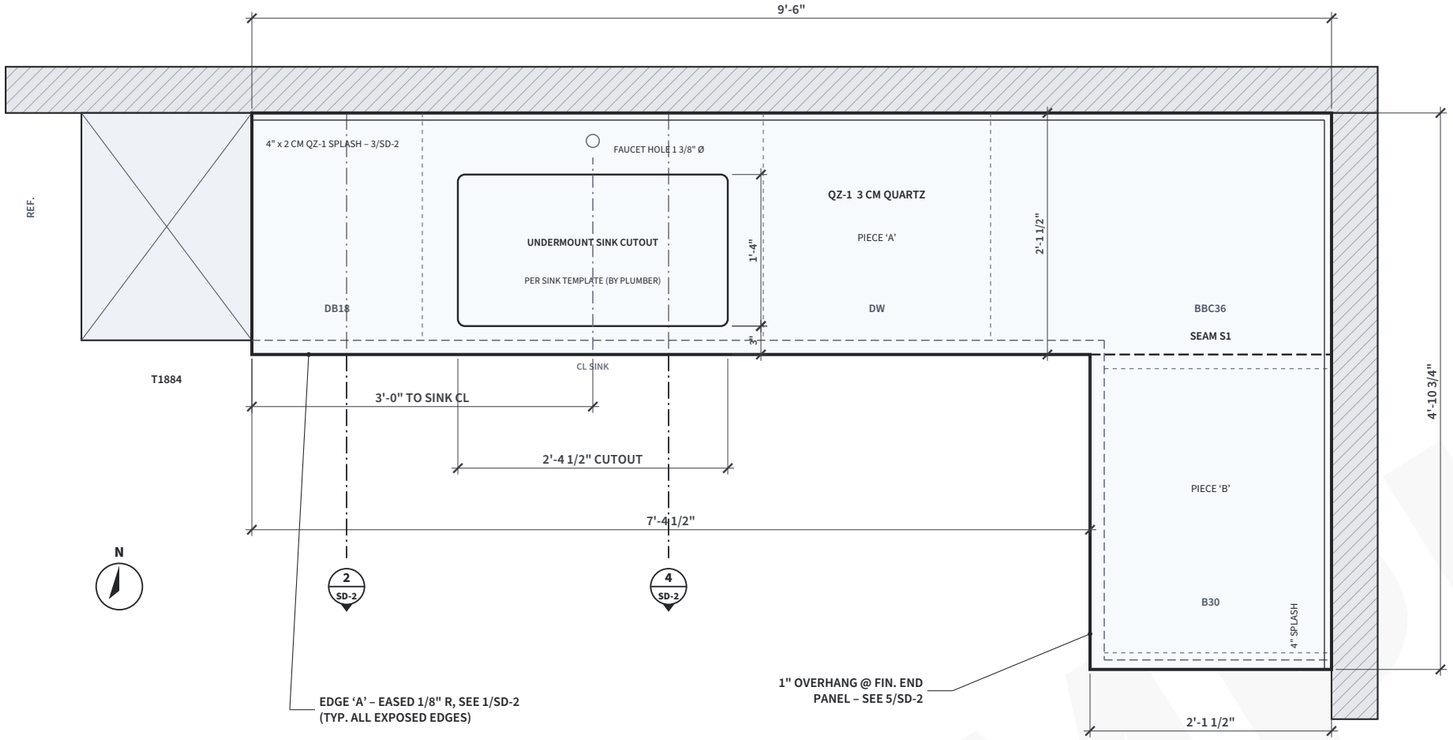

1 SD-1 COUNTERTOP & CASEWORK PLAN – BREAK ROOM 118

SCALE: 3/4" = 1'-0"

GENERAL NOTES

1. All dimensions field verified 10/05/26 after drywall finish. Do not scale drawings.

2. Countertop: QZ-1 3 cm, polished; exposed edges eased 1/8" R. Max overhang w/o support 10".

3. Seams: 1/16" max, color-matched epoxy, min. 6" from cutouts. Seam S1 at inside corner.

4. Undermount sink & faucet by plumbing sub; cutout per manufacturer template (on site 11/06).

5. Casework: AWI Custom grade. PL-1 exterior, white TFM interior, 3 mm PVC edge.

6. Base cabinets 34 1/2" H on separate 4" toe kick; wall cabinets 12" D, bottom at 54" A.F.F.

7. Wall blocking by GC: 2x8 continuous at 32"–36" and 52"–86" A.F.F.

8. Rev 2: per architect review – confirm DW opening 24" clear; sink CL 3'-0" from tall cab.

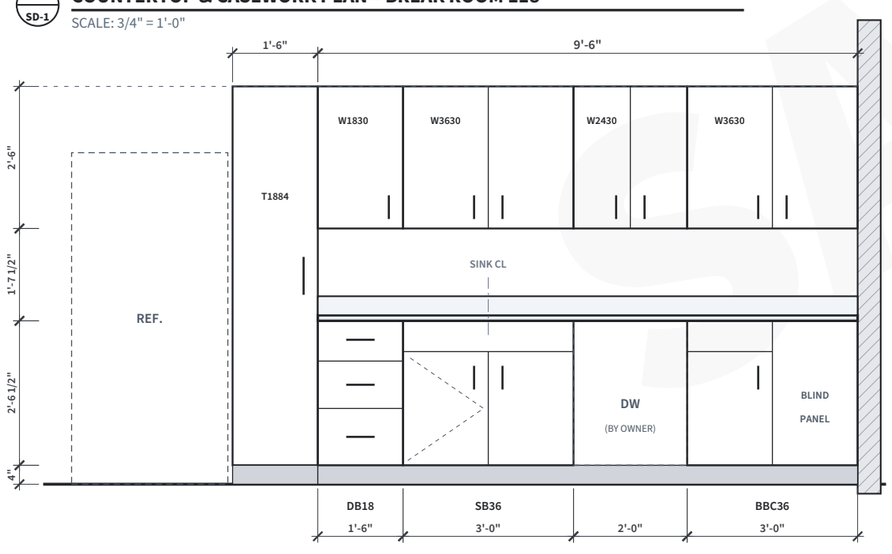

2 SD-1 ELEVATION A – NORTH WALL

SCALE: 3/8" = 1'-0"

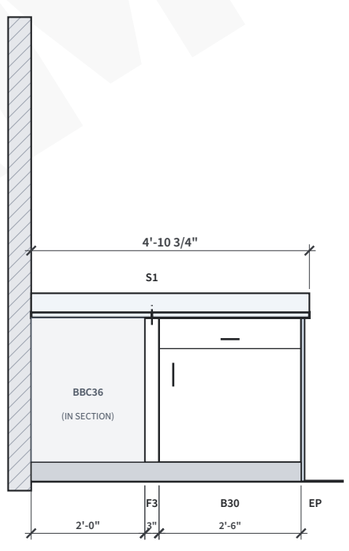

3 SD-1 ELEVATION B – EAST WALL

SCALE: 3/8" = 1'-0"

CABINET SCHEDULE – RM 118

TAG	DESCRIPTION	W x H x D	QTY
DB18	Drawer base, 3 drawers	18 x 34 1/2 x 24	1
SB36	Sink base, false front, 2 dr	36 x 34 1/2 x 24	1
BBC36	Blind corner base (blind 18")	36 x 34 1/2 x 24	1
B30	Base, 1 drawer / 2 doors	30 x 34 1/2 x 24	1
F3	Filler, scribe to corner	3 x 34 1/2	1
EP	Finished end panel, PL-1	3/4 x 34 1/2 x 24	1
W1830	Wall, 1 door	18 x 30 x 12	1
W3630	Wall, 2 doors	36 x 30 x 12	2
W2430	Wall, 2 doors	24 x 30 x 12	1
T1884	Tall pantry, 4 adj. shelves	18 x 84 x 24	1

COUNTERTOP SUMMARY

PIECE	SIZE	SF
A – run A incl. corner	9'-6" x 2'-1 1/2"	20.19
B – run B return	2'-9 1/4" x 2'-1 1/2"	5.89
Splash (2 CM, 4")	14'-4 3/4" total LF	4.80
TOTAL QZ-1 (est. 31 SF)	1 cutout · 1 faucet hole	30.87

SAMPLE – Fictional project for demonstration. All names, companies, quantities and figures are fictional. Prepared by Axentra Solutions as a portfolio work sample – not for construction.

AXENTRA SOLUTIONS
Drafting & Shop Drawing Services
[Phone] · [Email] · axentra-solutions.com

PROJECT
Riverside Medical Office Build-Out
1450 Riverbend Parkway, Suite 200
Anytown, ST 00000
Job no. 26-118

FABRICATOR / INSTALLER (CLIENT)
Summit Surfaces & Interiors, LLC
Casework & countertop subcontractor

GENERAL CONTRACTOR · ARCHITECT
Northgate Builders, Inc.
Lumen Architecture Studio

MATERIALS
QZ-1 3 cm quartz – "Glacier Mist", polished
PL-1 HPL – "Gray Linen" (PL-1), matte
Interior: white TFM · 3 mm PVC edgeband
Hardware: 110° concealed hinges, FEXT slides

REVISIONS

REV	DATE	DESCRIPTION	BY
0	09/14/26	Issued for approval	PPO
1	09/28/26	Sink CL moved per RFI-004; DW opening	PPO
2	10/06/26	Incorporate review notes; F.V. dims	PPO

ARCHITECT / GC REVIEW STAMP

☐ Approved ☑ Approved as noted
☐ Revise & resubmit ☐ Rejected

P. Nair, Lumen Architecture Studio – 10/02/26
Note: verify sink CL at rough-in (see Rev 1).

SAMPLE – Fictional project for demonstration. All names, companies and dimensions are fictional. Not for construction.

DRAWING TITLE
BREAK ROOM 118
CASEWORK & QUARTZ COUNTERTOP
PLAN, ELEVATIONS & SCHEDULE

DRAWN: Axentra Drafting	CHECKED: D. Whitfield
DATE: 09/14/26	SCALE: AS NOTED
SHOP DWG NO.: SD-26118-118	FIELD VERIFIED: 10/05/26
SHEET	REVISION

SD-1 2

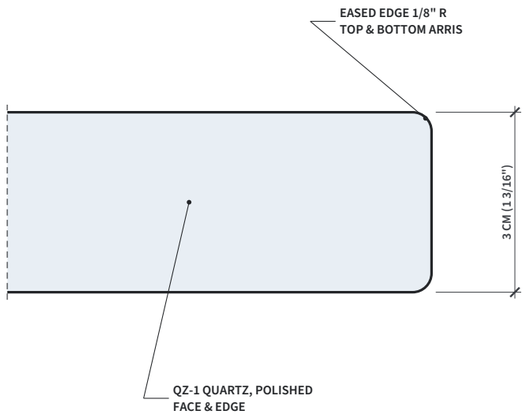

1 SD-2 EDGE PROFILE 'A' – EASED

SCALE: FULL SIZE (1:1)

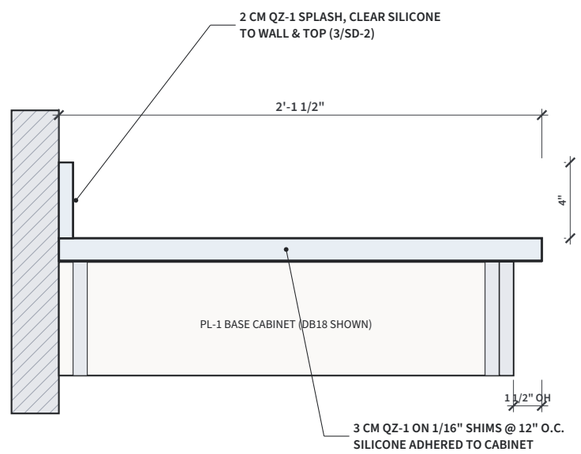

2 SD-2 TYPICAL COUNTERTOP SECTION

SCALE: 1 1/2" = 1'-0"

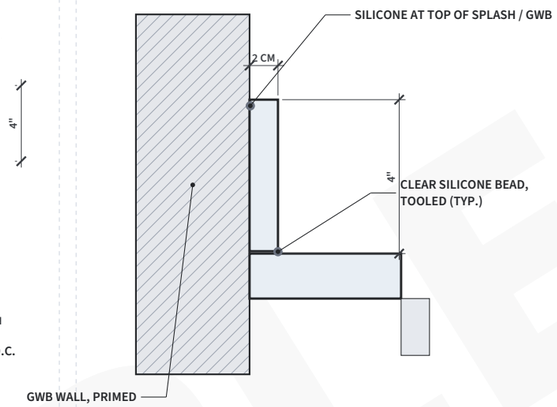

3 SD-2 BACKSPLASH DETAIL

SCALE: 3" = 1'-0"

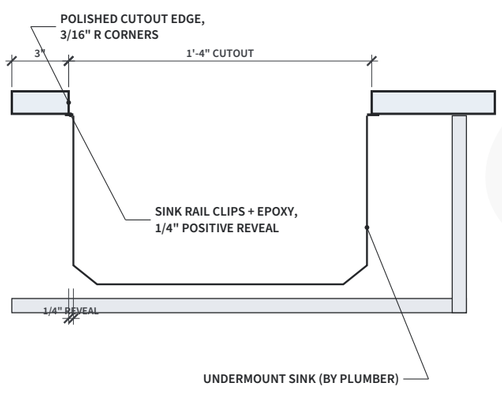

4 SD-2 UNDERMOUNT SINK SECTION

SCALE: 1 1/2" = 1'-0"

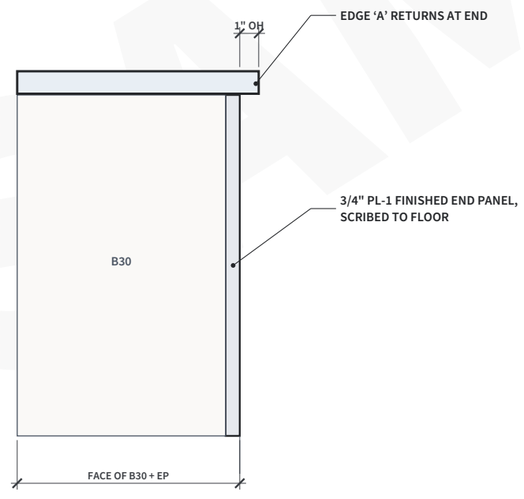

5 SD-2 OVERHANG AT FINISHED END

SCALE: 1 1/2" = 1'-0"

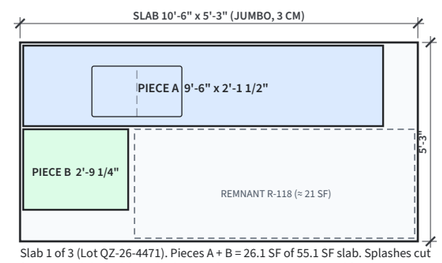

Slab 1 of 3 (Lot QZ-26-4471). Pieces A + B = 26.1 SF of 55.1 SF slab. Splashes cut from 2 CM slab S-4 (shared w/ Rm 105). Remnant R-118 tagged for Nurse Station 105 transaction ledge. Slabs 2–3: Reception 102 & Nurse Station 105 (SD-26118-102/105).

6 SD-2 SLAB LAYOUT / NESTING – SLAB 1

SCALE: 1/4" = 1'-0"

SAMPLE

SAMPLE – Fictional project for demonstration. All names, companies, quantities and figures are fictional. Prepared by Axentra Solutions as a portfolio work sample – not for construction.

AXENTRA SOLUTIONS
Drafting & Shop Drawing Services
[Phone] · [Email] · axentra-solutions.com

PROJECT
Riverside Medical Office Build-Out
1450 Riverbend Parkway, Suite 200
Anytown, ST 00000
Job no. 26-118

FABRICATOR / INSTALLER (CLIENT)
Summit Surfaces & Interiors, LLC
Casework & countertop subcontractor

GENERAL CONTRACTOR · ARCHITECT
Northgate Builders, Inc.
Lumen Architecture Studio

MATERIALS
QZ-1 3 cm quartz – "Glacier Mist", polished
PL-1 HPL – "Gray Linen" (PL-1), matte
Interior: white TFM · 3 mm PVC edgeband
Hardware: 110° concealed hinges, FEXT slides

REVISIONS

REV	DATE	DESCRIPTION	BY
0	09/14/26	Issued for approval	PPO
1	09/28/26	Sink CL moved per RFI-004; DW opening	PPO
2	10/06/26	Incorporate review notes; F.V. dims	PPO

ARCHITECT / GC REVIEW STAMP
☐ Approved ☑ Approved as noted
☐ Revise & resubmit ☐ Rejected
P. Nair, Lumen Architecture Studio – 10/02/26
Note: verify sink CL at rough-in (see Rev 1).

SAMPLE – Fictional project for demonstration. All names, companies and dimensions are fictional. Not for construction.

DRAWING TITLE
BREAK ROOM 118
COUNTERTOP & CASEWORK
DETAILS & SLAB LAYOUT

DRAWN: Axentra Drafting	CHECKED: D. Whitfield
DATE: 09/14/26	SCALE: AS NOTED
SHOP DWG NO.: SD-26118-118	FIELD VERIFIED: 10/05/26
SHEET	REVISION

SD-2 **2**

SAMPLE 06 PROJECT MANAGEMENT

Scope Schedule & Project Controls

Trade-level project management on the contractor's behalf: a scope schedule tied to the GC's master schedule, and live logs for RFIs, submittals and change orders, rolled up into a weekly report for the owner and the GC.

CONTRACTOR	Summit Surfaces & Interiors, LLC
GC	Northgate Builders, Inc.
GC PM / SUPT.	C. Holloway / M. Ellison
ARCHITECT	Lumen Architecture Studio
STATUS DATE	10/14/26
SUB. COMPLETION	12/18/26 (on schedule)

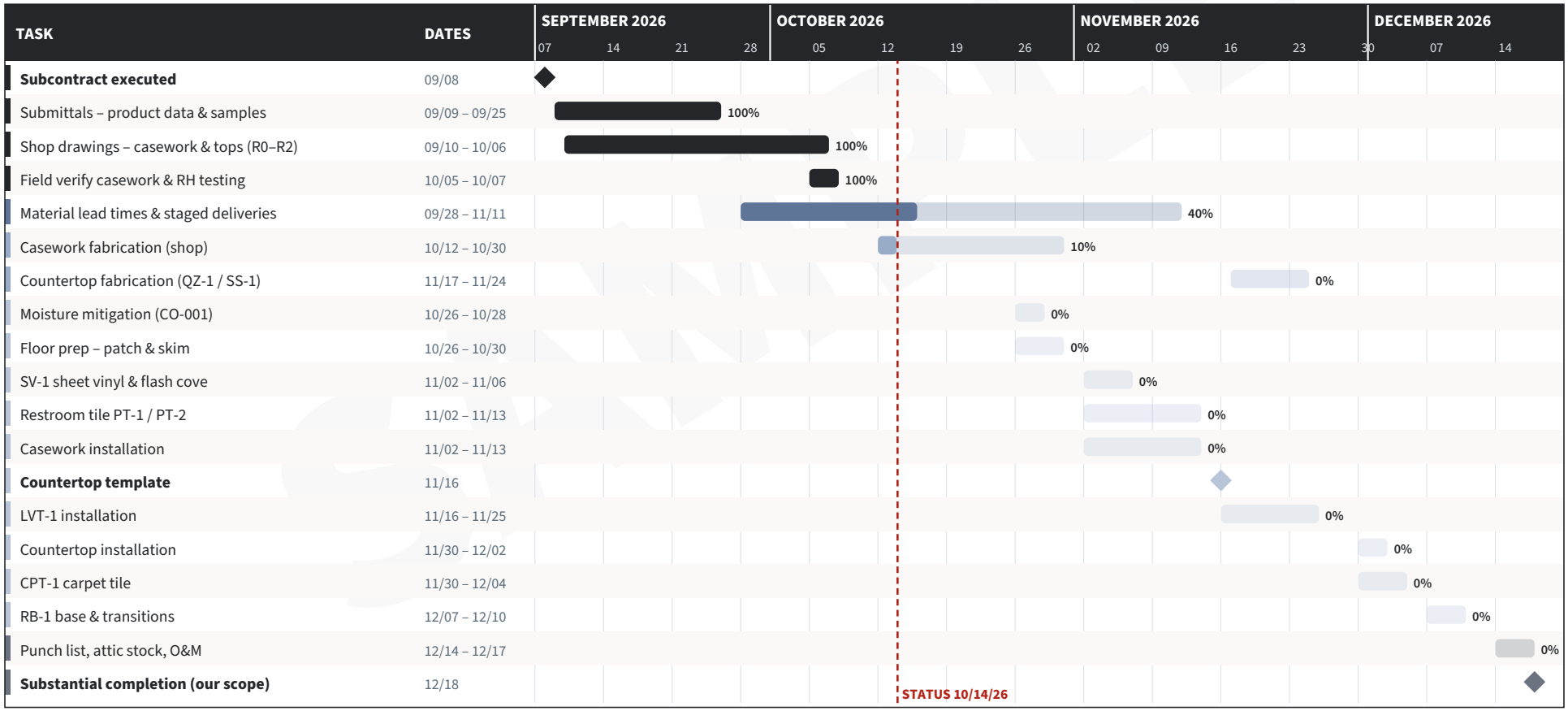

Bars: shaded = planned duration, solid = % complete. Colour key: charcoal = preconstruction, slate blue = procurement, periwinkle = shop, light periwinkle = field, grey = closeout. Field dates per Northgate master schedule Rev 4 (10/02/26). Countertops are templated after casework is set and fabricated in 6 working days.

SAMPLE – Fictional project for demonstration. All names, companies, quantities and figures are fictional.

Axentra Solutions · [Phone] · [Email] · axentra-solutions.com

RFI Log

Requests for information issued through the GC. Days open counted to answer date or status date (10/14/26).

RFI No.	Sent	Subject	Reference	Due	Answered	Days Open	Cost / Schedule Impact	Status
RFI-001	09/10	LVT-1 vs. SV-1 at Nurse Station 105 (finish plan vs. spec)	ID-101 / 09 65 16	09/14	09/14	4	None	Closed
RFI-002	09/15	Wall cabinet blocking heights not shown	A8.1–A8.4	09/18	09/18	3	None – by GC	Closed
RFI-003	09/17	Reception transaction top end condition	A8.2 / 12 36 61	09/22	09/22	5	CO-002 +$2,140	Closed
RFI-004	09/24	Break Rm 118 sink CL conflicts with plumbing rough-in	A8.3 / P2.1	09/29	09/28	4	None (SD Rev 1)	Closed
RFI-005	10/06	RH test results 88–91% at Rms 119–123 (limit 85%)	09 05 61	10/09	10/07	1	CO-001 +$5,820	Closed
RFI-006	10/08	Corridor A flatness exceeds 1/4" in 10' at 3 locations	09 05 61 / ID-101	10/15	–	6	CO-003 pending	Open
RFI-007	10/13	Confirm SS-1 color at Lab 121 (schedule lists SS-1 & SS-2)	ID-601	10/20	–	1	TBD	Open

Submittal Log

Submitted to Northgate Builders for architect review. Required-by dates support the procurement log.

Spec / No.	Description	Type	Rev	Submitted	Returned	Days in Review	Action
06 41 16-01	Casework shop drawings SD-26118 series	Shop dwg	R2	09/14	10/02	18	Approved as Noted
06 41 16-02	Casework hardware product data	Product data	R0	09/14	09/21	7	Approved
12 36 61-01	QZ-1 quartz samples & product data	Sample	R0	09/12	09/19	7	Approved
12 36 61-02	SS-1 solid surface samples & data	Sample	R0	09/12	09/22	10	Approved as Noted
09 65 19-01	LVT-1 luxury vinyl plank	PD + sample	R0	09/11	09/24	13	Approved
09 68 13-01	CPT-1 carpet tile	PD + sample	R0	09/11	09/24	13	Approved
09 65 16-01	SV-1 sheet vinyl, weld rod, cove cap	PD + sample	R0	09/11	09/24	13	Approved
09 65 13-01	RB-1 rubber base & transitions	PD + sample	R0	09/11	09/24	13	Approved
09 30 13-01	PT-1 floor tile, cove base & setting materials	PD + sample	R0	09/16	09/25	9	Approved
09 30 13-02	PT-2 wall tile & grout colors	PD + sample	R0	09/16	09/25	9	Approved
09 05 61-01	Moisture mitigation system (CO-001)	Product data	R0	10/08	10/09	1	Approved
01 78 23-01	O&M / maintenance data – all finishes	Closeout	–	12/14*	–	–	Scheduled
01 78 36-01	Warranties (1-yr install + mfr.)	Closeout	–	12/18*	–	–	Scheduled

* Scheduled submission date (closeout).

SAMPLE – Fictional project for demonstration. All names, companies, quantities and figures are fictional.

Change Order Log

Original subcontract = base bid. Change orders priced at estimate unit rates with 10% OH / 7% profit.

CO No.	Description	Ref.	Submitted	Approved	Amount	Sched. Impact	Status
CO-001	Moisture mitigation at Procedure, Lab & Utility rooms per RH test results, 995 SF @ $5.85 (ALT-1 pricing)	RFI-005	10/07	10/09	$5,820	+0 d*	**Approved**
CO-002	Reception transaction top revised to quartz waterfall end panels (2)	RFI-003	09/22	09/29	$2,140	+0 d	**Approved**
CO-003	Additional floor prep at Corridor A - grind high spots, 1/4" self-leveler	-	10/08	–	$3,415	+0 d	**Pending**
CO-004	Delete one tall storage cabinet at Lab 121 per owner (credit)	ASI-02	10/09	–	($1,480)	+0 d	**Pending**
	Original subcontract (base bid)				**$306,900**		
	Approved change orders				**$7,960**		
	REVISED SUBCONTRACT VALUE				**$314,860**		
	Pending change orders (not included)				**$1,935**		
	Projected contract if pending approved				**$316,795**		

* CO-001 mitigation fits within existing float (10/26–10/28) ahead of SV-1 start 11/02; no change to substantial completion.

Change Order Summary – CO-001 (backup)

Item	Qty	Unit	Unit Price	Amount
2-part epoxy moisture mitigation, Rms 119–123 (excludes Janitor 138)	995	SF	$5.85	$5,820.75
Price basis: ALT-1 unit price from bid form (08/13/26), incl. material, labor, OH & profit				
CO-001 TOTAL (rounded)				**$5,820**

SAMPLE

Weekly Progress Report No. 6 – Week Ending 10/09/26

From Summit Surfaces & Interiors, LLC to Northgate Builders, Inc. (C. Holloway, PM). Prepared by Axentra Project Management Desk.

SCHEDULE	SCOPE COMPLETE	OPEN RFIS	COS APPROVED
On track	**8%**	**1**	**$7,960**
0 days variance	Precon 100% · field 0%	RFI-006 due 10/15	2 approved · 2 pending

Summary. Preconstruction is complete. RH testing on 10/06 found 88–91% RH in the procedure, lab and utility rooms; RFI-005 was answered the next day and CO-001 (moisture mitigation, $5,820) was approved 10/09 and ordered the same day. Shop drawing Rev 2 was approved as noted, field dimensions are verified, and casework sheet goods arrived 10/08. Fabrication starts Monday 10/12.

Work Completed This Week

- ✓ Field verification of all casework locations (Rms 102, 105, 106–121) – 10/05.
- ✓ RH testing (ASTM F2170), 14 probes – results issued with RFI-005 – 10/06.
- ✓ Shop drawings SD-26118 Rev 2 issued 10/06 incorporating architect notes (approved as noted 10/02).
- ✓ Casework sheet goods & hardware received and checked in at shop (PO-26118-001) – 10/08.
- ✓ RFI-006 issued for Corridor A flatness; CO-003 pricing ($3,415) submitted 10/08.
- ✓ CO-001 approved 10/09; mitigation epoxy ordered (PO-26118-006), ETA 10/21.

Two-Week Look-Ahead (10/12 – 10/23)

Activity	Dates	Crew	Notes
Casework fabrication – exam rooms & break room	10/12 – 10/29	Shop 4	See Shop Services production schedule
Release SS-1 PO (PO-26118-005)	10/12	PM	Color confirmation pending RFI-007
Quartz slab selection / lot approval at Stonebridge	10/14	PM + owner	3 slabs, lot QZ-26-4471
Wall blocking walk with Northgate superintendent	10/16	Lead	Prior to GC drywall close-in at Rm 121
Mitigation epoxy delivery	10/21	–	Install 10/26–10/28 (CO-001)

Manpower & Hours

Role	This week (hrs)	To date (hrs)	Budget (hrs)	Next week (plan)
Project management / coordination	9	43	60	6
Field lead (verification, testing)	14	22	120	4
Shop drafting	4	32	32	0
Shop fabrication crew	0	0	–	160 (4 × 40)

Open Issues & Risks

#	Issue	Owner	Need by	Status
1	Corridor A flatness – direction on grinding/self-leveler (RFI-006 / CO-003)	Northgate / Lumen	10/15	**Open**
2	Lab 121 SS-1 color confirmation (RFI-007) – holds SS-1 PO	Lumen	10/20	**Open**
3	CO-004 credit (Lab 121 tall cabinet) – owner sign-off before fabrication	Owner	10/19	**Pending**
4	LVT-1 delivery 11/11 with 2 days float to 11/13 need-by	Axentra PM	11/11	**In Progress**

SAMPLE

SAMPLE 07 SHOP SERVICES

Shop Production Schedule

Fabrication coordination for the contractor's casework & countertop shop: work orders released from the approved shop drawings, loaded against weekly crew capacity, and tied to the field install dates so material ships just in time.

SHOP	Summit Surfaces & Interiors, LLC – Shop
JOB	26-118 – Riverside MOB
CREW / CAPACITY	4 fabricators · 160 hrs/wk
DRAWINGS	SD-26118 series, Rev 2
STATUS DATE	10/21/26
COORDINATOR	Axentra Shop Desk

Work Order	Description	Rooms	Quantity	Shop Hrs	Wk 10/12	Wk 10/19	Wk 10/26	Wk 11/02	Wk 11/09	Wk 11/16	Wk 11/23	Status
WO-26118-01	Casework – Exam Rms 106–111	106–111	36 LF B / 36 LF W	101.0	CUT · ASSY · QC 101 h							Complete
WO-26118-02	Casework – Exam Rms 112–117	112–117	36 LF B / 36 LF W	101.0	CUT · EB 39 h	ASSY · QC 62 h						Complete
WO-26118-03	Casework – Break Room	118	14 LF B / 10 LF W / 1 T	40.4	CUT · EB 20 h	ASSY · QC 20.4 h						Complete
WO-26118-04	Casework – Reception & Nurse Stn	102, 105	34 LF B / 10 LF W	66.4		CUT → QC 66.4 h						In Progress
WO-26118-05	Casework – Procedure, Lab, Utility	119–123	54 LF B / 42 LF W / 4 T	160.8		CUT 11.2 h	EB · ASSY · QC 149.6 h					In Progress
–	Stage, wrap & deliver casework	All	Truck 10/30 + 11/02	–			SHIP 10/30	SHIP 11/02				Scheduled
WO-26118-06	SS-1 solid surface tops (template 11/16)	106–123	255 SF / 17 cutouts	89.0						FAB 62 h	QC · SHIP 27 h	Scheduled
WO-26118-07	QZ-1 quartz tops (template 11/16)	102, 105, 118	111 SF / 1 cutout	50.0						SAW · CNC 36 h	POLISH · QC 14 h	Scheduled
WO-26097-14	Harbor View Dental – punch doors (26-097)	–	6 doors	6.0				PUNCH 6 h				Scheduled
	Planned shop hours			**614.6**	**160.0**	**160.0**	**149.6**	**6.0**	**0.0**	**98.0**	**41.0**	
	Crew capacity (hrs)				**160**	**160**	**160**	**80**	**80**	**160**	**96**	
	Utilization				**100%**	**100%**	**94%**	**8%**	**0%**	**61%**	**43%**	

Weeks 11/02 and 11/09 at half capacity: two fabricators assigned to field casework installation (11/02–11/13). Week of 11/23 shortened for the holiday. Countertop work orders release after field template 11/16; tops install 11/30–12/02. CO-004 (delete one Lab 121 tall cabinet) on hold in WO-05 pending owner sign-off.

SAMPLE – Fictional project for demonstration. All names, companies, quantities and figures are fictional.

Axentra Solutions · [Phone] · [Email] · axentra-solutions.com

Work Order WO-26118-03 – Break Room 118 Casework · Cut List

Released 10/09/26 from SD-1/SD-2 Rev 2 (approved as noted 10/02). Cut 10/12–10/14 · assemble 10/19–10/20 · QC 10/20 · ship 10/30 (truck 1).

Job	26-118 Riverside MOB	**Material – carcass**	3/4" white TFM (PO-26118-001)	**Edgeband**	3 mm PVC – Gray Linen / white
Room	118 Break Room	**Material – fronts**	3/4" PB core, PL-1 HPL both faces	**Hardware**	110° hinges, FEXT soft-close slides, 4" wire pulls
Cabinets	11 units (see SD-1 schedule)	**Backs**	1/4" white melamine, dadoed	**Label format**	26118-118-[TAG]-[PART]

#	Cab. Tag	Part	Material	Qty	Length	Width	Edgeband	Label	✓
1	DB18	Side	TFM 3/4	2	30 1/2"	23 1/4"	1 L (front)	26118-118-DB18-01	
2	DB18	Bottom	TFM 3/4	1	16 1/2"	23 1/4"	1 L	26118-118-DB18-02	
3	DB18	Stretcher (top)	TFM 3/4	2	16 1/2"	4"	1 L	26118-118-DB18-03	
4	DB18	Back	MEL 1/4	1	17"	30"	–	26118-118-DB18-04	
5	DB18	Drawer front	PL-1 3/4	1	17 7/8"	11 7/8"	4 sides	26118-118-DB18-05	
6	DB18	Drawer front	PL-1 3/4	1	17 7/8"	9 7/8"	4 sides	26118-118-DB18-06	
7	DB18	Drawer front	PL-1 3/4	1	17 7/8"	8 3/8"	4 sides	26118-118-DB18-07	
8	SB36	Side	TFM 3/4	2	30 1/2"	23 1/4"	1 L (front)	26118-118-SB36-08	
9	SB36	Bottom	TFM 3/4	1	34 1/2"	23 1/4"	1 L	26118-118-SB36-09	
10	SB36	Stretcher (top)	TFM 3/4	2	34 1/2"	4"	1 L	26118-118-SB36-10	
11	SB36	Back	MEL 1/4	1	35"	30"	–	26118-118-SB36-11	
12	SB36	Door	PL-1 3/4	2	23 7/8"	17 7/8"	4 sides	26118-118-SB36-12	
13	SB36	False front	PL-1 3/4	1	35 7/8"	6 3/8"	4 sides	26118-118-SB36-13	
14	BBC36	Side	TFM 3/4	2	30 1/2"	23 1/4"	1 L (front)	26118-118-BBC36-14	
15	BBC36	Bottom	TFM 3/4	1	34 1/2"	23 1/4"	1 L	26118-118-BBC36-15	
16	BBC36	Stretcher (top)	TFM 3/4	2	34 1/2"	4"	1 L	26118-118-BBC36-16	
17	BBC36	Back	MEL 1/4	1	35"	30"	–	26118-118-BBC36-17	
18	BBC36	Door	PL-1 3/4	1	23 7/8"	17 7/8"	4 sides	26118-118-BBC36-18	
19	BBC36	Drawer front	PL-1 3/4	1	17 7/8"	6 3/8"	4 sides	26118-118-BBC36-19	
20	BBC36	Blind panel	PL-1 3/4	1	30 1/2"	18"	4 sides	26118-118-BBC36-20	
21	B30	Side	TFM 3/4	2	30 1/2"	23 1/4"	1 L (front)	26118-118-B30-21	
22	B30	Bottom	TFM 3/4	1	28 1/2"	23 1/4"	1 L	26118-118-B30-22	
23	B30	Stretcher (top)	TFM 3/4	2	28 1/2"	4"	1 L	26118-118-B30-23	
24	B30	Back	MEL 1/4	1	29"	30"	–	26118-118-B30-24	
25	B30	Door	PL-1 3/4	2	23 7/8"	14 7/8"	4 sides	26118-118-B30-25	
26	B30	Drawer front	PL-1 3/4	1	29 7/8"	6 3/8"	4 sides	26118-118-B30-26	
27	W1830	Side	TFM 3/4	2	30"	11 1/4"	1 L	26118-118-W1830-27	
28	W1830	Top / bottom	TFM 3/4	2	16 1/2"	11 1/4"	1 L	26118-118-W1830-28	
29	W1830	Adj. shelf	TFM 3/4	2	16 7/16"	10 3/4"	1 L	26118-118-W1830-29	
30	W1830	Back	MEL 1/4	1	17"	29 1/2"	–	26118-118-W1830-30	
31	W1830	Door	PL-1 3/4	1	29 7/8"	17 7/8"	4 sides	26118-118-W1830-31	
32	W3630	Side	TFM 3/4	4	30"	11 1/4"	1 L	26118-118-W3630-32	
33	W3630	Top / bottom	TFM 3/4	4	34 1/2"	11 1/4"	1 L	26118-118-W3630-33	

SAMPLE – Fictional project for demonstration. All names, companies, quantities and figures are fictional.

#	Cab. Tag	Part	Material	Qty	Length	Width	Edgeband	Label	✓
34	W3630	Adj. shelf	TFM 3/4	4	34 7/16"	10 3/4"	1 L	26118-118-W3630-34	
35	W3630	Back	MEL 1/4	2	35"	29 1/2"	–	26118-118-W3630-35	
36	W3630	Door	PL-1 3/4	4	29 7/8"	17 7/8"	4 sides	26118-118-W3630-36	
37	W2430	Side	TFM 3/4	2	30"	11 1/4"	1 L	26118-118-W2430-37	
38	W2430	Top / bottom	TFM 3/4	2	22 1/2"	11 1/4"	1 L	26118-118-W2430-38	
39	W2430	Adj. shelf	TFM 3/4	2	22 7/16"	10 3/4"	1 L	26118-118-W2430-39	
40	W2430	Back	MEL 1/4	1	23"	29 1/2"	–	26118-118-W2430-40	
41	W2430	Door	PL-1 3/4	2	29 7/8"	11 7/8"	4 sides	26118-118-W2430-41	
42	T1884	Side	TFM 3/4	2	80"	23 1/4"	1 L	26118-118-T1884-42	
43	T1884	Top / bottom	TFM 3/4	2	16 1/2"	23 1/4"	1 L	26118-118-T1884-43	
44	T1884	Fixed shelf	TFM 3/4	1	16 1/2"	23 1/4"	1 L	26118-118-T1884-44	
45	T1884	Adj. shelf	TFM 3/4	4	16 7/16"	22 1/2"	1 L	26118-118-T1884-45	
46	T1884	Back	MEL 1/4	1	17"	79 1/2"	–	26118-118-T1884-46	
47	T1884	Door (upper)	PL-1 3/4	1	49 7/8"	17 7/8"	4 sides	26118-118-T1884-47	
48	T1884	Door (lower)	PL-1 3/4	1	29 7/8"	17 7/8"	4 sides	26118-118-T1884-48	
49	F3	Filler	PL-1 3/4	1	30 1/2"	3"	2 L	26118-118-F3-49	
50	EP	Finished end panel	PL-1 3/4	1	34 1/2"	24"	4 sides	26118-118-EP-50	
51	TK	Toe kick, run A (scribe)	PLY 3/4	1	113 1/4"	4"	–	26118-118-TK-51	
52	TK	Toe kick, run B	PLY 3/4	1	33"	4"	–	26118-118-TK-52	
		TOTAL PARTS: 87		**87**					

Material	Net SF	Sheets (4x8) @ 75% yield	Source
TFM 3/4	159.9	7	PO-26118-001 Cascade Panel
MEL 1/4	56.1	3	PO-26118-001 Cascade Panel
PL-1 3/4	64.8	3	PO-26118-001 Cascade Panel
PLY 3/4	4.1	1	Shop stock

Countertop pieces (WO-26118-07)	Size	Edge	Notes
QZ-1 Piece A – run A incl. corner	114" x 25 1/2"	Eased, front	Sink cutout per template; faucet hole 1 3/8"
QZ-1 Piece B – run B return	33 1/4" x 25 1/2"	Eased, front + end	Seam S1 to Piece A; 1" OH at end
QZ-1 2 CM splash (run A / run B)	114" / 58 3/4" x 4"	Eased top	From slab S-4

SAMPLE

SAMPLE – Fictional project for demonstration. All names, companies, quantities and figures are fictional.

Quality Control Checklist – Casework (WO-26118-03, Break Room 118)

Inspected at shop 10/20/26 before wrap & stage. Tolerances per AWI Custom grade and project specification 06 41 16.

#	Inspection item	Measurement / note	Result	Init.
1	Box dimensions within ±1/32" of cut list (W, H, D)	11 of 11 boxes measured	**PASS**	J.T.
2	Square: diagonals within 1/16"	Max deviation 1/32" (B30)	**PASS**	J.T.
3	Edgeband fully adhered, flush trimmed, no glue squeeze-out	Visual, all exposed edges	**PASS**	J.T.
4	PL-1 color/finish matches approved sample (Gray Linen, matte)	Sample #12 36 61-01 ref.	**PASS**	J.T.
5	Door & drawer reveals 1/8" uniform; hinges adjusted	W3630 #2 at 3/16" → adjusted, re-checked	**PASS**	J.T.
6	Drawer slides full-extension, soft-close, 100 lb rated	Cycle-tested 5× each	**PASS**	J.T.
7	Pulls installed, aligned to template (4" wire pull)	Template P-4 used	**PASS**	J.T.
8	Shelf pins & adjustable shelves installed; deflection ≤ 1/8"	T1884 4 shelves, W cabs 8	**PASS**	J.T.
9	Finished ends / EP laminated where exposed (SD-1)	EP at run B, T1884 left side	**PASS**	J.T.
10	Sink base: no bottom stretcher conflict w/ plumbing (RFI-004)	Open back 12" per SD Rev 1	**PASS**	J.T.
11	Each box labeled 26118-118-[TAG]; count matches schedule	11 units + F3 + EP + 2 TK	**PASS**	J.T.
12	Protection: corner guards, stretch wrap, moving blankets	Staged Bay 2, truck 1 (10/30)	**PASS**	J.T.
13	Field-cut items noted (scribe fillers, toe kick)	F3 & TK shipped long +1/2"	**PASS**	J.T.

Result	Inspected by	Released by	Date
ACCEPTED – release to stage	J. Torres, shop lead	Axentra Shop Desk	10/20/26

#	Countertop QC – WO-26118-07 (form)	Result
1	Slab lot/color verified to approved sample (lot QZ-26-4471)	☐ Pass ☐ Fail
2	Template matches SD-1 dims ±1/16"; sink CL at 3'-0"	☐ Pass ☐ Fail
3	Cutout per sink template; 3/16" R polished corners	☐ Pass ☐ Fail
4	Edge profile 'A' eased 1/8" R, consistent sheen	☐ Pass ☐ Fail
5	Seam S1 locations & max 1/16" joint dry-fit	☐ Pass ☐ Fail
6	Faucet hole 1 3/8" Ø at sink CL	☐ Pass ☐ Fail
7	No chips, fissures or resin pits; thickness 3 cm	☐ Pass ☐ Fail
8	Pieces labeled 26118-118-A / -B; A-frame strapped	☐ Pass ☐ Fail

Countertop QC is performed after fabrication (scheduled 11/24/26) and again at install. Blank form shown; completed forms are filed with the job.

Shop KPIs – WO-03	
Planned / actual hours	40.4 / 38.5
Rework items	1 (door reveal)
First-pass yield	92% (12 of 13 items)
On-time to ship	Yes – 10 days early

SAMPLE

SAMPLE – Fictional project for demonstration. All names, companies, quantities and figures are fictional.

1 / A-1 KITCHEN

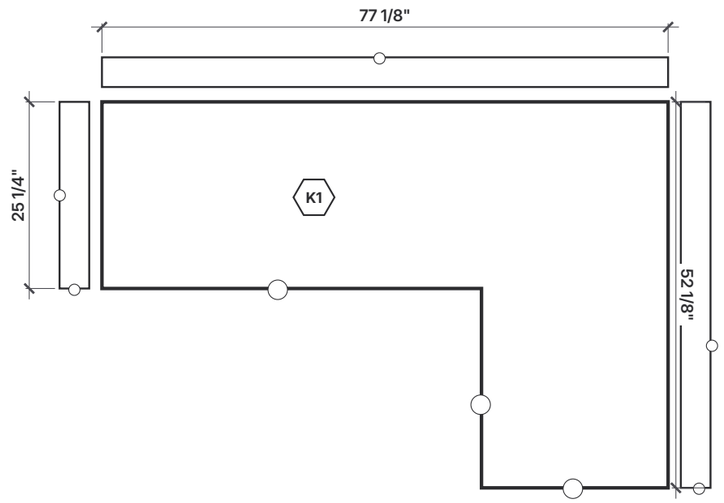

2 / A-1 BATH 1

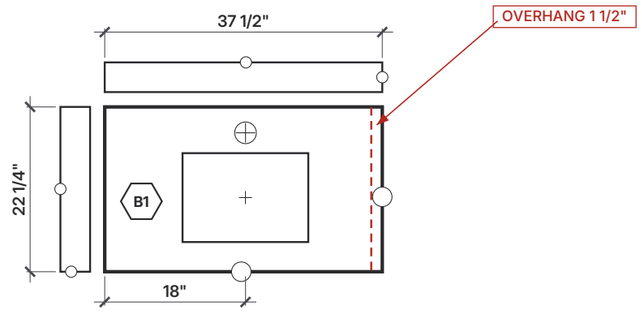

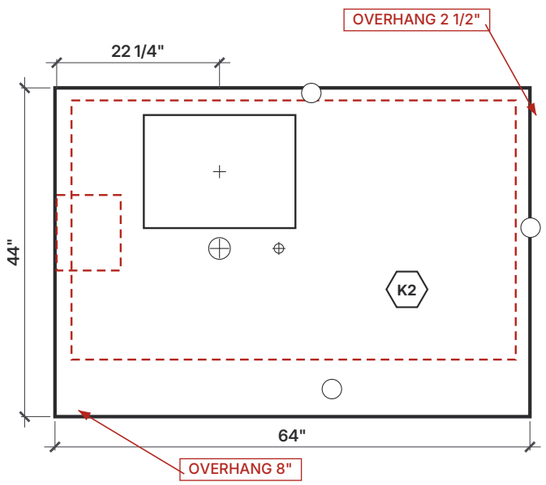

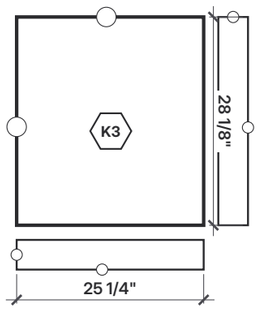

3 / A-1 BATH 2

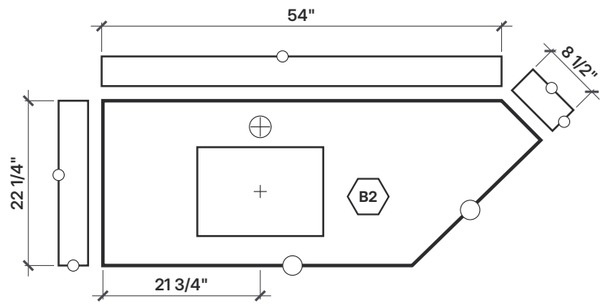

COUNTERTOP SCHEDULE

TAG	ROOM	SIZE (W x D) — PER LAYOUT	SPLASH	NOTES
K1	KITCHEN	77 1/8" x 52 1/8" L, 25 1/4" leg	BACK 77 1/8" + SIDES 25 1/4", 52 1/8"	L-shaped top
K2	KITCHEN	64" x 44"	—	Sink top, Cantrio KSS-105; overhang 2 1/2" / 8"
K3	KITCHEN	25 1/4" x 28 1/8"	SIDE 28 1/8" + 25 1/4" (bottom edge)	Separate top
B1	BATH 1	37 1/2" x 22 1/4"	BACK 37 1/2" + L SIDE 22 1/4"	Sink 18" to CL; overhang 1 1/2" right end
B2	BATH 2	54" x 22 1/4", angled R end	BACK 54" + L SIDE 22 1/4" + 8 1/2" @45°	Sink 21 3/4" to CL; 45° clipped back corner

Splash heights, thickness & quantity not specified on layout — confirm at approval.

GENERAL NOTES

1. All dimensions in inches, from the 04/23/2026 layout. Do not scale drawing.
2. Field verify all dimensions before fabrication.
3. Color: Simply Grey. Edge: eased & polished.
4. Sink: Cantrio KSS-105 (undermount cutouts shown at sink centerline).
5. Overhangs shown as red dashed lines.
6. Install date: 06/02/2026.
7. Fabrication starts only after signed approval.

LEGEND

- Countertop outline (cut)
- Backsplash / side splash
- Overhang line
- Eased & polished edge
- Faucet / fixture hole
- K1 Countertop tag
- Dimension string

EDGE PROFILE

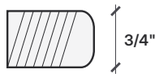

EASED & POLISHED

AXENTRA SOLUTIONS

AXENTRA SOLUTIONS
axentra-solutions.com | [Phone] | [Email]

PROJECT
SAMPLE KITCHEN

SCOPE
COUNTERTOP FABRICATION & INSTALL

SHEET TITLE
COUNTERTOP SHOP DRAWING

ROOMS
KITCHEN • BATH 1 • BATH 2

DRAWN BY	CHECKED BY
AXENTRA	AXENTRA QC
DATE 10/14/2026	LAYOUT DATE 04/23/2026
SCALE 3/8" = 1'-0"	INSTALL DATE 06/02/2026
COLOR SIMPLY GREY	SINK CANTRIO KSS-105
THICKNESS —	QUANTITY —
METAL ROD —	EDGE EASED & POLISHED

REVISIONS

REV	DATE	DESCRIPTION	BY
0	04/23/2026	ORIGINAL LAYOUT	—
A	10/14/2026	REDRAWN FOR APPROVAL	AX

CLIENT APPROVAL

APPROVED BY: _____

DATE: _____

Approval confirms dimensions, layout, color & edge. Field verify before fabrication.

FOR APPROVAL

NOT FOR FABRICATION UNTIL SIGNED

SAMPLE – Fictional project. Names & identifiers anonymized.

SHEET NO. **A-1**

SHEET 1 OF 1